IEEE

EMC EDUCATION MANUAL

Prepared by the Education Committee of the

IEEE EMC Society

EMC SOCIETY

CONTENT

Direct inquiries to:

Clayton R. Paul

Department of Electrical Engineering

University of Kentucky

Lexington, KY 40506

USA

(606)–257–1644

INTENT OF THE MATERIAL

The intent of this material is to aid in the establishment of a course in Electromagnetic Compatibility (EMC) at a university in an Electrical Engineering program. Several institutions in the US and throughout the world offer such a course. However, there is a growing need for more institutions to incorporate such a course in their undergraduate Electrical Engineering curricula. For a further discussion of the rationale for such a course, see C.R. Paul, "Establishment of a University Course in Electromagnetic Compatibility (EMC)", **IEEE Transactions on Education**, Vol. 33, No. 1, pp. 111–118, February 1990.

In 1979, the Federal Communications Commission (FCC) in the United States imposed a rule in its Rules and Regulations, Part 15, Subpart J which makes it illegal to market a digital device that has a clock frequency greater than 9 kHz unless the radiated and conducted (out the ac power cord) emissions of the device have been measured and found to not exceed the limits set by the FCC. The FCC limits on the conducted emissions extend from 450 kHz to 30 MHz, and the limits on the radiated emissions extend from 30 MHz to 40 GHz. Digital products that are to marketed in other parts of the world are subject to similar and no less stringent requirements (e.g., CISPR 22). These legal requirements have created a need for all digital designers to be aware of the EMC ramifications of their design and of some fundamental EMC design considerations. Industrial companies that design and market these digital devices can no longer afford the cost and schedule delay consequences resulting from their digital designers being unaware of EMC design principles. Consequently, the subject of EMC is now being viewed by the industrial world as being an important component of an undergraduate electrical engineer's education.

The material included in this packet was prepared by the Education Committee of the IEEE Electromagnetic Compatibility Society and is intended to assist those in the academic community who wish to establish an undergraduate course in EMC at their institution. It is not specifically intended to be used in establishing short courses for industry. That need is currently being served by various consulting organizations. This packet contains a suggested course outline, an EMC Bibliography and a set of EMC laboratory experiments/demonstrations. The EMC Bibliography was prepared by Kimball Williams, The Eaton Corporation. The latter two items were prepared previously by the Education Committee of the IEEE EMC Society . Additional texts that may be used in the preparation of the course along with other principal sources of information are listed at the end of the suggested course outline and in the EMC Bibliography. There are numerous possible versions of this course outline that will achieve the goal of making the graduating Electrical Engineer aware of the fundamental EMC design principles as well as the hazards of ignoring EMC in the design of electronic and, in particular, digital products. The committee welcomes modifications of this course outline to fit the institution's particular needs.

The question of where to place such a course in an already crowded curriculum is difficult to uniquely answer. Placement of the course among the list of senior technical electives has been satisfactory at some schools. This does not displace the present required courses on basics upon which this material draws heavily.

SUGGESTED OUTLINE

for

A University Course in Electromagnetic Compatibility

Prepared by the IEEE EMC Society, Education Committee

I. INTRODUCTION TO ELECTROMAGNETIC COMPATIBILITY (EMC)

1.1 Aspects of EMC

(source, transfer path, receptor, conducted emissions, conducted susceptibility, radiated emissions, radiated susceptibility)

1.2 History of EMC

1.3 Examples

1.4 Electrical Dimensions

(wavelengths)

1.5 Decibels and Common EMC Units

II. EMC REQUIREMENTS FOR ELECTRONIC SYSTEMS

2.1 Governmental Requirements

2.1.1 Requirements for commercial products marketed in the United States (FCC)

2.1.2 Requirements for commercial products marketed outside the United States (CISPR 22, VDE)

2.1.3 Requirements for military products
marketed in the United States
(MIL–STD–461B, MIL–STD–462)

2.1.4 Measurement of commercial product emissions for
verification of compliance

2.1.4.1 Radiated emissions
(chambers and open–field sites, radiated electric field)

2.1.4.2 Conducted emissions
(LISN)

2.2 Additional Product Requirements

2.2.1 Radiated susceptibility
(radar, FM radio stations)

2.2.2 Conducted susceptibility
(power line disturbances, lightning)

2.2.3 Electrostatic discharge (ESD)

2.3 Design Constraints for Products
(cost, manufacturability, schedule, product appearance)

2.4 Advantages of EMC Design
(cost, schedule, manufacturability)

III. COMPONENTS

3.1 Wires and Printed Circuit Board (PCB) Lands
(wire gauge, resistance, inductance, capacitance)

3.2 Effect of Component Leads
(lumped–circuit models)

3.3 Equivalent Circuit of Resistors

3.4 Equivalent Circuit of Capacitors

3.5 Equivalent Circuit of Inductors

3.6 Ferrites and Common–Mode Chokes

(common–mode currents, saturation, ferrite materials)

3.7 Ferrite Beads

3.8 Electromechanical Devices

(DC and AC motors, solenoids, mechanical switches)

3.9 Active Components

(transistors, diodes, operational amplifiers, digital gates)

IV. SIGNAL SPECTRA

4.1 Review of the Fourier Series (Periodic Waveforms)

4.2 Spectra of Digital Circuit Waveforms

4.2.1 The spectrum of trapezoidal (clock) waveforms

4.2.2 Spectral bounds for trapezoidal waveforms

(effect of rise/fall time, repetition rate, duty cycle, and ringing)

4.3 Spectrum Analyzers

4.4 Review of the Fourier Transform (Nonperiodic Waveforms)

4.5 Spectral Representation of Random Signals

V. RADIATED EMISSIONS AND SUSCEPTIBILITY

5.1 Review of Electromagnetic Field Theory

(Maxwell's equations, boundary conditions, uniform plane waves)

5.2 Review of Antenna Theory

(electric (Hertzian) dipole, magnetic dipole (loop), half–wave dipole, directivity and gain, effective aperture, antenna factor, Friis transmission equation)

5.3 Effects of Reflections

(method of images, normal incidence of uniform plane waves, multipath effects)

5.4 Broadband measurement antennas

(biconical and log–periodic antennas)

5.5 Emission Models for Wires and PCB Lands

5.5.1 Relative effects of differential– and common–mode currents

5.5.2 Differential–mode current emission model

5.5.3 Common–mode current emission model

5.5.4 Current probes

5.6 Susceptibility Models for Wires and PCB Lands

VI. CONDUCTED EMISSIONS AND SUSCEPTIBILITY

6.1 Measurement of Conducted Emissions

(the LISN)

6.2 Power Supply Filters

(basic properties of filters, typical power supply filters, effects of the filter elements on common– and differential–mode currents)

6.3 Power Supplies

(linear power supplies, switched–mode power supplies (SMPS), effect of power supply components on conducted emissions)

6.4 Power Supply and Filter Placement

VII. TRANSMISSION LINES AND CROSSTALK

7.1 Review of Two–Conductor Transmission Lines

7.2 Three–Conductor Lines and Crosstalk

(the transmission–line equations and the per–unit–length parameters)

7.3 Frequency–domain (sinusoidal, steady–state) crosstalk

9.3.1 Preventing the ESD event

9.3.2 Hardware immunity

9.3.3 Software immunity

X. SYSTEM DESIGN FOR EMC

10.1 Grounding

(safety ground vs. signal ground, single–point vs. multi–point grounding, common–impedance coupling)

10.2 System Configuration

(enclosures, gaskets and apertures, placement of power line filter, placement of printed circuit boards and cable connectors, cable routing)

10.3 Printed Circuit Board Design

(component selection, power distribution, component placement, PCB ground grids, decoupling capacitors)

Suggested References:

Textbooks:

(1)H.W. Ott, **Noise Reduction Techniques in Electronic Systems**. second edition, John Wiley Interscience, NY, 1988.

(2)C.R. Paul, **Introduction to Electromagnetic Compatibility**. John Wiley Interscience, NY, 1992.

(3)C.R. Paul and S.A. Nasar, **Introduction to Electromagnetic Fields**. second edition, McGraw–Hill, NY, 1987.

(4)R.K. Keenan, **Digital Design for Interference Specifications**. The Keenan Corporation, 1983.

(5)B. Keiser, **Principles of Electromagnetic Compatibility**, third edition, Artech House,

1987.

(6)N. Violette, D.R.J. White, and M. Violette, **Electromagnetic Compatibility Handbook**, Van Nostrand Reinhold, NY, 1987.

(7)C.R. Paul, **Analysis of Linear Circuits**. McGraw–Hill, NY, 1989.

(8)J.R. Barnes, **Electronic System Design: Interference and Noise Control Techniques**, Prentice–Hall, 1987.

(9)Warren Boxleitner, **Electrostatic Discharge and Electronic Equipment: A Practical Guide for Designing to Prevent ESD Problems**, IEEE Press, 1989.

(10)J.C. Fluke, **Controlling Conducted Emissions by Design**, Van Nostrand Reinhold, 1991.

(11)E.R. Freeman and M. Sachs, **Electromagnetic Compatibility Design Guide**, Artech House, 1982.

(12) R.H. Golde, **Lightning Protectionn**, Chemical Publishing Co., 1973.

(13)W.C. Hart and E.W. Malone, **Lightning and Lightning Protection**, Don White Consultants, 1985.

(14)K.R. Keenan, **Decoupling and Layout of Digital Printed Circuits**, The Keenan Corp., 1985.

(15)M. Mardiguian, **Electrostatic Discharge: Understand, Stimulate, and Fix ESD Problems**, Interference Control Technologies, 1986

(16)R. Morrison, **Grounding and Shielding Techniques in Instrumentation**, Third Edition, John Wiley and Sons, 1986.

(17)R. Morrison and W.H. Lewis, **Grounding and Shielding in Facilities**, John Wiley and Sons, 1990.

(18)M.J. Nave, **Power Line Filter Design for Switched–Mode Power Supplies**, Van Nostrand Reinhold, 1991.

(19)A.A. Smith, Jr., **Coupling of External Electromagnetic Fields to Transmission Lines**, John Wiley and Sons, 1977.

(20)M. A. Uman, **Lightning**, Dover Publications, 1984.

(21)E.F. Vance, **Coupling to Shielded Cables**, John Wiley and Sons, 1978.

(22)J.J. Goedbloed, **Electromagnetic Compatibility**, Kluwer, Deventer, The Netherlands, 2nd Ed. 1991 (in Dutch), to be published in English by Prentice Hall (1992).

Symposia Proceedings:

(1)Proceedings of the IEEE International Symposium on Electromagnetic Compatibility, The Institute of Electrical and Electronics Engineers, USA.

(2)Proceedings of the International Zurich Symposium and Technical Exhibition on Electromagnetic Compatibility, Zurich, Switzerland.

(3)Proceedings of the IEE International Conference on Electromagnetic Compatibility, the Institution of Electrical Engineers, United Kingdom.

(4)Proceedings of the International Conference on Electromagnetic Interference and Compatibility, Bangalore, India.

(5)Proceedings of the International Symposium on EMC, Wroclaw, Poland.

(6)EMC Expo.

Journals:

(1)**IEEE Transactions on Electromagnetic Compatibility**

Trade Journals:

(1)EMC Technology

(2)Compliance Engineering

(3)ITEM

(4)EMC Test & Design

(5)RF Design

EXPERIMENTS AND DEMONSTRATIONS

IN

ELECTROMAGNETIC COMPATIBILITY

Edited by

Henry W. Ott

and

Clayton R. Paul

Prepared by the Education Committee of the

IEEE Electromagnetic Compatibility Society

Revised July 1992

CONTENTS

INTRODUCTION

This document, produced by the Education Committee of the IEEE Electromagnetic Compatibility Society is intended to be a source of material for courses, laboratory experiments and demonstrations on the subject of Electromagnetic Compatibility.

The document is not the work of any one individual, rather a compilation of material submitted by many individuals. To these contributors the document owes its success.

Comments and/or criticisms of this document, as well as any EMC demonstrations or experiments that you would like to have considered for inclusion in future editions of this booklet should be sent to:

Clayton R. Paul
Education Committee Chairman
IEEE Electromagnetic Compatibility Society
Department of Electrical Engineering
University of Kentucky
Lexington, KY 40506

(606) 257–1644

We encourage you to submit any experiments/demonstrations that involve EMC principles for inclusion in future editions of this booklet. If you wish to submit, please follow the suggested format and instructions on the next page in preparing that submission.

FORMAT OF SUBMITTED EXPERIMENTS

(Title)
by (Author)
(Affiliation)

1. OBJECTIVE

Concise but complete statement of what the person doing the experiment is expected to get out of it.

2. EQUIPMENT

List all essential equipment and any necessary minimum requirements of that equipment, such as bandwidth, sensitivity, etc. Since the intent of this booklet is widespread use, don't list equipment that can be found only in certain specialized labs. Try to use oscilloscopes whose bandwidths are not greater than 50 MHz. Sinusoidal oscillators with frequency capabilities no higher than 10 to 50 MHz should be used. Pulse or function generators should not require pulse repetition rates greater than 1 MHz, nor pulse rise/fall times less than 10 to 50 ns.

Specialized test jigs should not be required; use of a soldering iron, readily available wire, nuts and bolts, and pieces of wood or metal are examples of types of items that should be used to construct the experiment. Don't require the use of a spectrum analyzer, unless absolutely necessary, since these are not as commonly available as an oscilloscope. Be clever; try to demonstrate the principle without the need for elaborate or sophisticated test equipment or jigs. For example, an FM radio receiver might be usable in place of a $40,000 EMI receiver to demonstrate a principle. Remember, we are trying to demonstrate a principle, not necessarily make accurate measurements.

3. PROCEDURE

Give step by step, explicit instructions of how you want the experiment performed and in what order. Don't leave anything to the imagination. Don't assume an experienced test engineer will be performing the experiment.

Once you have compiled your submission in this format, run the experiment per your written procedure to uncover any "bugs", not just in the experiment but also in your instructions. It is preferable to have someone not as experienced as you run the experiment.

4. THEORY

In this section give a simple but sound explanation of what is going on in the experiment in terms of the basic principles you are trying to demonstrate. Use only the minimum theoretical explanation required to explain it. Don't scare the reader with theoretical details, but on the other hand don't give simplistic "hand–waving" arguments either. It requires a clever person who truly understands the basic principles to "walk this thin line".

You may wish to give examples of specific instances where these principles have applicaton. Don't use "buzz words" such as: "The flim–flam principle demonstrated above can be used in the ABM system to drive the FRK in the DUT". Imagine yourself trying to explain the relevance of these principles to a new graduate on his/her first day on the job.

5. REFERENCES

Give only those references directly germane to elaborating on a specific point. These should be items in which the reader can find additional details concerning the principle. These should also be items which are clearly written and available to the reader. It should

not be a way of avoiding a clear explanation of what's going on such as; "Well, I think it is here but I can't tell". Textbooks are usually preferable to journal or symposium articles since they usually contain more detail and are usually more available and more suitable to teaching than a journal or symposium article.

CONTRIBUTORS

Clayton R. Paul	University of Kentucky, USA
Tony Nasuta	Westinghouse Electric Corp., USA
Henry W. Ott	Henry Ott Consultants, USA
Raymond F. Elsner	Martin Marietta Aerospace, USA
Douglas C. Smith	AT&T Information Systems, USA
Andy Marvin	University of York, UK
Thomas A. Jerse	University of Kentucky, USA (formerly with Hewlett Packard)
Jasper J. Goedbloed	Philips Research Laboratories Eindhoven, The Netherlands
Richard J. Mohr	R.J.Mohr Associates, Inc., USA

CROSSTALK IN CABLES

by

Clayton R. Paul
Department of Electrical Engineering
University of Kentucky

1. OBJECTIVE

To understand the mechanism of crosstalk in which the electromagnetic fields of electrical signals on one pair of wires in a cable bundle couple to and induce signals in another pair of wires. To investigate the factors that influence the coupling and methods for reducing the crosstalk.

2. EQUIPMENT

A. Sinusoidal oscillator (1kHz to 1MHz) with 50 ohm source impedance and at least 20V p–p open–circuit voltage.

B. Function or pulse generator capable of producing 100 kHz pulse trains having rise/fall times of 1 μs or less and an open–circuit voltage of 5V p–p.

C. Dual trace oscilloscope (at least 50 MHz bandwidth).

D. Cables
   1. Standard appliance cord (10').
   2. RG–58 coaxial cable (5').
   3. Two 6' lengths of insulated hookup wire (20 to 24 gauge).

E. Four 10 ohm carbon resistors (1/4 watt).

3. PROCEDURE

3.1 Crosstalk in Unshielded Wires

1. Place two 5' lengths of appliance cord flat on a nonmetallic table and tape them together so that the insulations are touching as shown in Figure 1(a).
2. Solder the 10 ohm resistors to the ends of these cords as shown in Figure 1(a).
3. Attach the oscillator to one cord, and one channel of the oscilloscope to measure V_1. Adjust the frequency of the oscillator to 1kHz and the output level at V_1 to 3V p–p. Attach the other channel of the oscilloscope to the other cord (across the 10 ohm resistor) to measure V_2. Repeat the measurements at frequencies of 1.0, 1.5, 2.0, 2.5, 3.0, 4.0, 5.0, 6.0, 7.0, 8.0 and 9.0 in each decade up to 1MHz. Increase the oscillator frequency until you get a V_2 that is measureable.
4. Plot the interference voltage transfer ratio: V_2/V_1, at the above frequencies on 3 cycle log–log graph paper.
5. Repeat the above experiment with the two appliance cords parallel but separated by 1/2 inch.
6. Replace the sinusoidal oscillator with the function generator set to produce a 100 kHz square wave with a peak voltage of 0.5 V and a pulse rise/fall time of 1 microsecond.
7. Sketch V_1 and V_2 versus time and note the effect on V_2 of changing the rise/fall time of V_1. Observe that the level of V_2 is directly dependent on the rise/fall time of V_1; the shorter the rise/fall time of V_1 the larger the amplitude of V_2.

3.2 Crosstalk by Common Impedance Coupling

1. Repeat 3.1 for the configuration shown in Figure 1(b). The two appliance cords are

to remain taped together as in 3.1 (1). Simply resolder two 10 ohm resistors between both ends of one wire of each pair of cords.

3.3 Crosstalk in Shielded Cables

1. Replace the driven pair of wires with a 5 foot length of RG–58 coaxial (shielded) cable as shown in Figure 1(c).
2. Repeat 3.1 (3 to 7) for this configuration.
3. Replace the coaxial cable with the pair of insulated hookup wire and twist these two wires together to give about one twist every three inches.
4. Repeat 3.1 (3 to 7) for this configuration.

4. THEORY

4.1 Crosstalk in Unshielded Wires

1. Currents and voltages associated with signal transmission on a pair of parallel wires (the generator wires) generate electric and magnetic fields in the vicinity of those wires. These electromagnetic fields interact with any neighboring wires (the receptor wires) and induce voltages and currents into these lines as shown in Figure 2. Portions of these induced signals appear at the ends of the receptor wire circuit. This unintentional coupling of signals from one circuit to another can cause the devices at the ends of the receptor wires to be interfered with and thus their performance can be degraded. This is commonly referred to as crosstalk. This crosstalk is due to two mechanisms. The current of the generator line produces a magnetic field that is coupled to the receptor line by the mutual inductance, L_m, between the two circuits. This is referred to as inductive coupling. Similarly, the voltage of the generator line produces an electric field that is coupled to the receptor line by a mutual capacitance, C_m, between the two circuits. This is referred to as capacitive coupling. Both mutual impedances are functions of the cross–sectional dimensions of the lines such as wire radii, and wire separation. Separating the two lines reduces the mutual impedances. Both L_m and C_m are direct functions of the line length; doubling the line length doubles the crosstalk, V_2. The crosstalk also varies directly as the frequency of the signal on the generator line; the higher the frequency the higher the crosstalk. Thus for the experiment shown in Figure 1(a), the magnitude of the output voltage should be [1,2,3]:

$$V_2 = f\,K(L_m)\,L\,I_1 + f\,K(C_m)\,L\,V_1 \qquad (1)$$

where I_1 and V_1 are the current and voltage of the generator line, L is the line length, f is the frequency of I_1 and V_1, and $K(L_m)$ and $K(C_m)$ are the inductive and capacitive coupling coefficients, respectively, for the particular cross–sectional configuration. Note that the crosstalk should increase linearly with frequency. This should slow up on your graphs as a line with a slope of 20 dB/decade. Normally, one component of the coupling will dominate the other. For small terminal resistances where currents and magnetic fields are large, the inductive coupling will be larger than the capacitive coupling. For large terminal resistances where the voltages and electric fields are large, the situation is reversed.

2. Time–domain crosstalk is also due to this mutual inductance and mutual capacitance between the two circuits. The time–domain voltage induced across the load of the receptor line, $v_2(t)$, is [2,3]

$$v_2(t)=\frac{1}{2\pi} K(L_m) \frac{di_1(t)}{dt} L + \frac{1}{2\pi} K(C_m) \frac{dv_1(t)}{dt} L \qquad (2)$$

Note that the induced voltage is proportional to the time–derivative (slope) of the current and voltage waveforms in the generator circuit. Typical waveforms resemble trains of triangular–shaped pulses as shown in Figure 3. So the induced crosstalk voltage resembles pulses occurring during the rise/fall times of the driven line voltage. The heights of the pulses are proportional to the slope of these transitions on the generator line.

4.2 Crosstalk by Common Impedance Coupling

1. Whenever two currents share a common return path, the current of this desired signal passing through this impedance of the return path develops a voltage across the common impedance that appears directly in the receptor circuit [2]. For the case shown in Figure 1(a), the two circuits do not share a common return path. However, suppose we wished to "save wire" and choose to have both circuits share one of the wires as a common return. This configuration is shown in Figure 1(b).

In the case of Figure 1(b), the common impedance consists of one of the wires of the appliance cord. This configuration is modeled as shown in Figure 4(a). Each wire of the appliance cord consists of 41 strands of #34 gauge wire. From reference [2] each strand has a resistance of 0.2609 ohms/foot. The total resistance of each wire consists of 41 of these strands in parallel or 0.00636 ohms/foot. For a 5–foot length, the total resistance of this common path is 0.0318 ohms. The voltage developed across this common impedance is:

$$V_c = R_c \times I_G \qquad (3)$$

which is equal to 9.6 mV p–p in this case. This voltage is divided across the two 10 ohm resistors of the receptor circuit as shown in Figure 4 by voltage division to give:

$$V_2 = \frac{V_c}{2} = 4.8 \text{ mV (p–p)} \qquad (4)$$

For the configuration shown in Figure 1(b), the magnitude of the output voltage is again given by Equation (1) but the coupling coefficients are different than for Figure 1(a).

As the frequency of the signal is decreased, the combined electric and magnetic field coupling will decrease at a rate of 20 dB/decade until it reaches this "floor" produced by common impedance coupling. As the frequency is further reduced, the crosstalk will remain at this level due to common impedance coupling even as the frequency is reduced to DC ! (See Figure 4(a).)

2. Time–domain crosstalk involving common–impedance coupling is similar to the previous case(time–domain crosstalk not involving common–impedance coupling) with the addition of a constant level between the rise and fall times of the pulse. Between the rise and fall times, the input voltage appears virtually constant at V_0 (see Figure 3) so that

$$v_2(t) = \frac{v_c(t)}{2} = 0.8 \text{ mV} \qquad (5)$$

where the voltage across the common impedance is

$$v_c(t) = R_c \frac{v_1(t)}{10} = 1.6 \text{ mV} \tag{6}$$

The total time–domain crosstalk voltage is the superposition of (2) and (5).

4.3 Crosstalk Reduction Techniques

1. Replacing the pair of wires of the generator line with a coaxial cable as shown in Figure 1(c) can reduce the crosstalk. The shield tends to confine the electric field to its interior, thus reducing the electric field coupling. Also the generator line currents are essentially located on the same axis but are equal and oppositely directed. Thus the effect of the magnetic field is canceled in the vicinity of the receptor circuit[1,2].
2. Because the effects of the electric and magnetic fields from adjacent twists tend to cancel in the vicinity of the receptor circuit, twisting a pair of wires together will have the effect of cancelling the fields caused by the voltage and currents on those wires [2]. Thus the crosstalk induced in a nearby receptor circuit will be reduced.

5. REFERENCES

1. Ott, H.W., **Noise Reduction Techniques in Electronic Systems**, John Wiley & Sons, 2nd Edition, 1988.

2. C.R. Paul, **Introduction to Electromagnetic Compatibility**, John Wiley & Sons, NY, 1992.

3. Paul, C.R., "Printed Circuit Board Crosstalk", **1985 IEEE International Symposium on Electromagnetic Compatibility**, Wakefield, Mass., August, 1985.

Figure 1

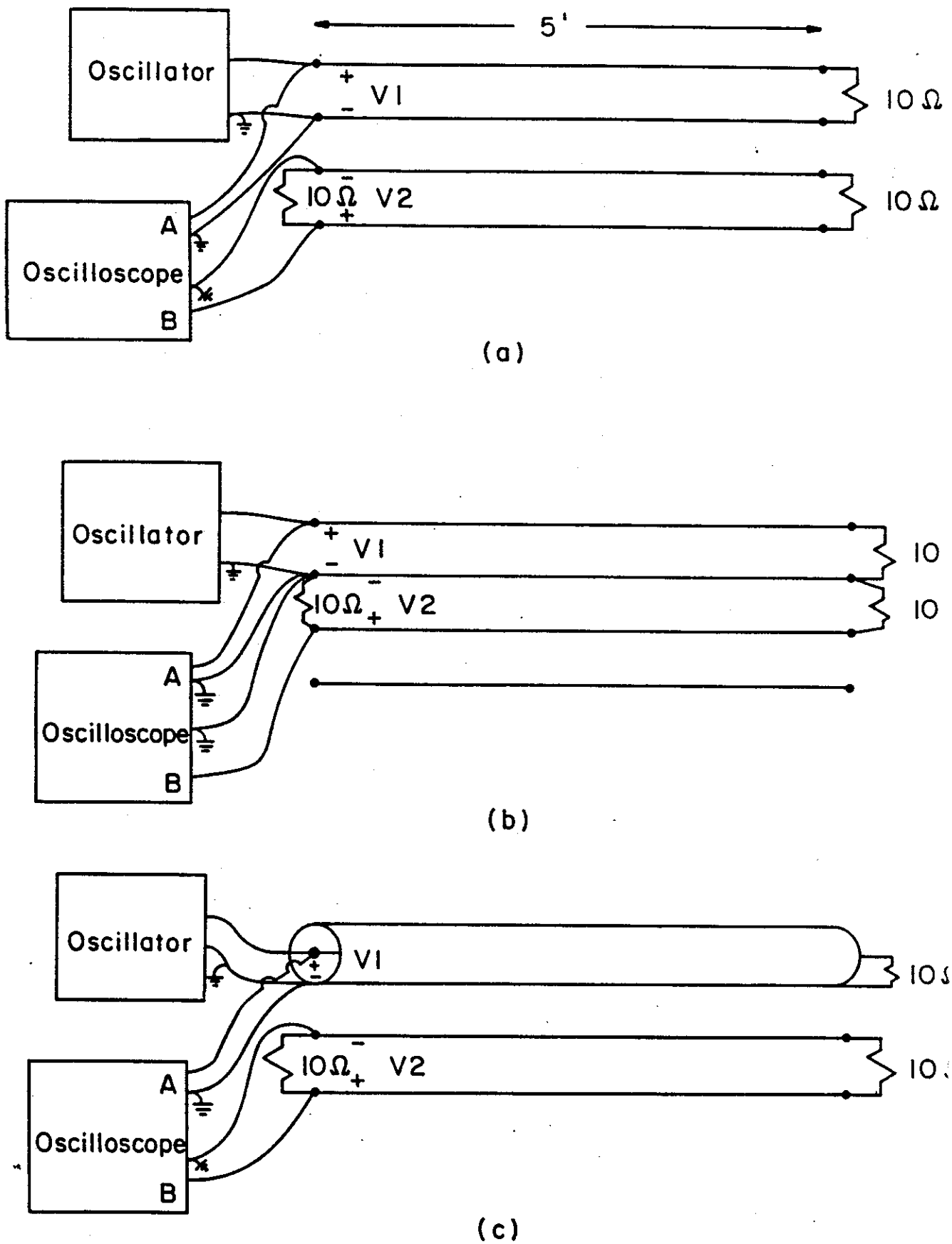
5'
Oscillator
+
V1
-
10 Ω
10Ω
V2
10 Ω
A
Oscilloscope
B
(a)
Oscillator
+
V1
-
10
10Ω
V2
10
A
Oscilloscope
B
(b)
Oscillator
V1
10
10Ω
V2
10
A
Oscilloscope
B
(c)

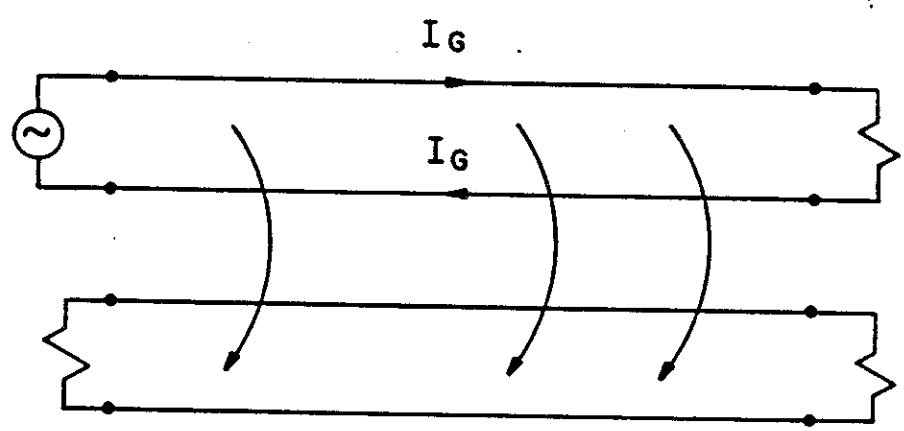

(a) Magnetic Field Coupling (Inductive)

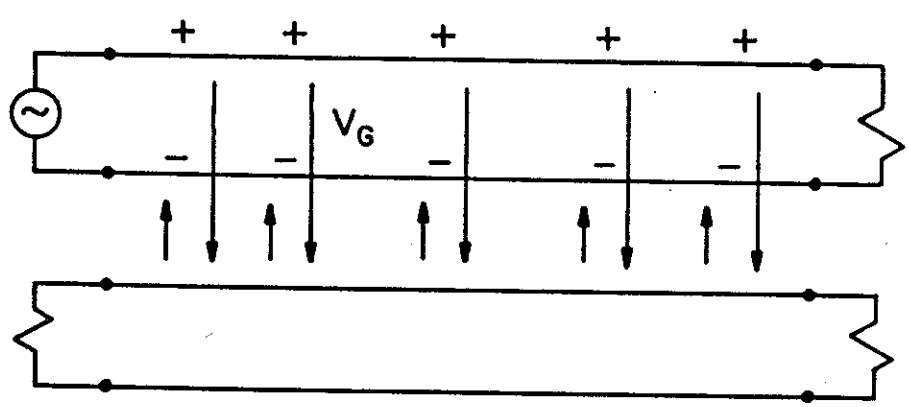

(b) Electric Field Coupling (Capacitive)

Figure 2

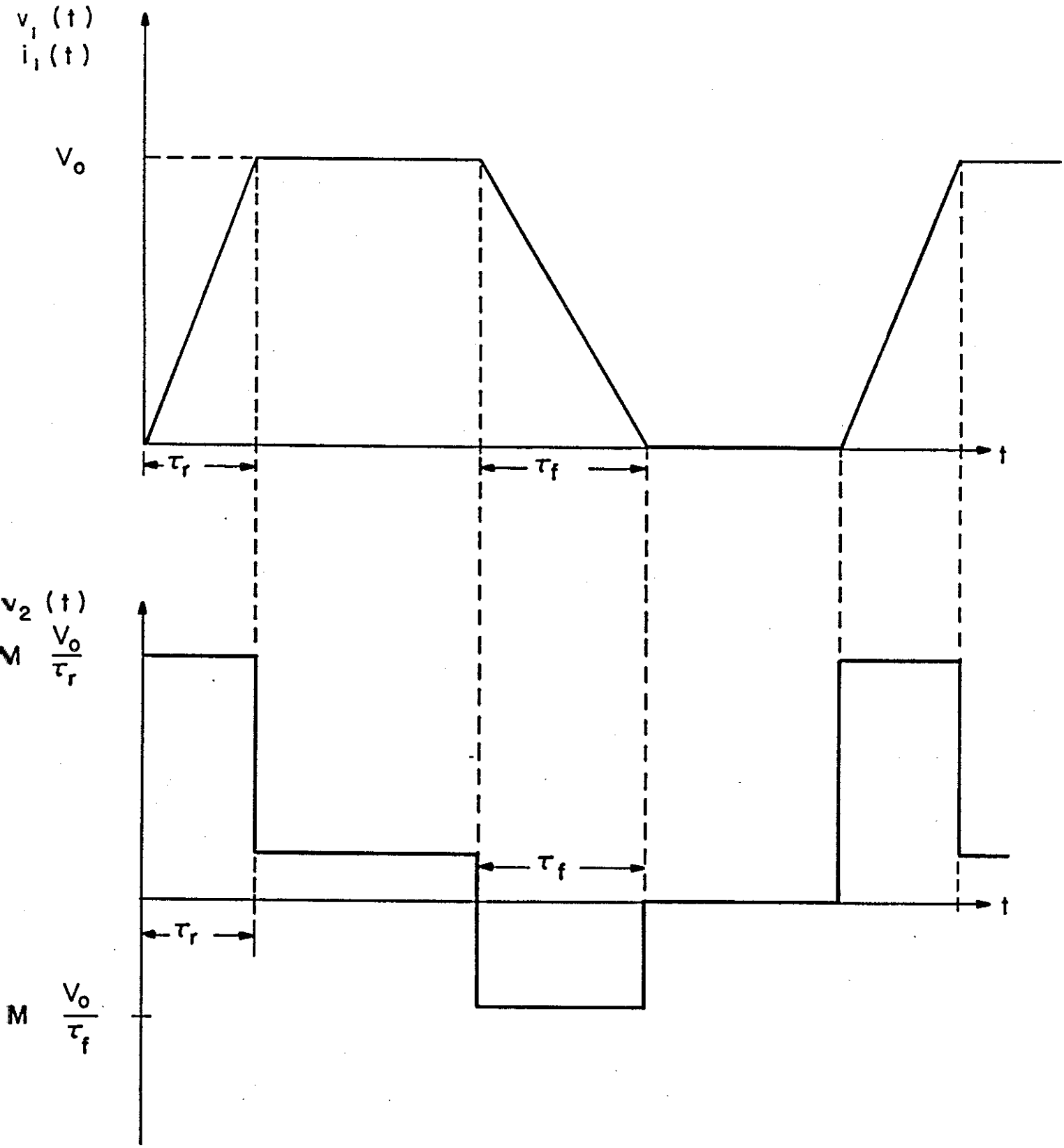
$v_1(t)$
$i_1(t)$
V_o
τ_r
τ_f
t
$v_2(t)$
$M \frac{V_o}{\tau_r}$
τ_f
t
τ_r
$M \frac{V_o}{\tau_f}$

Figure 3

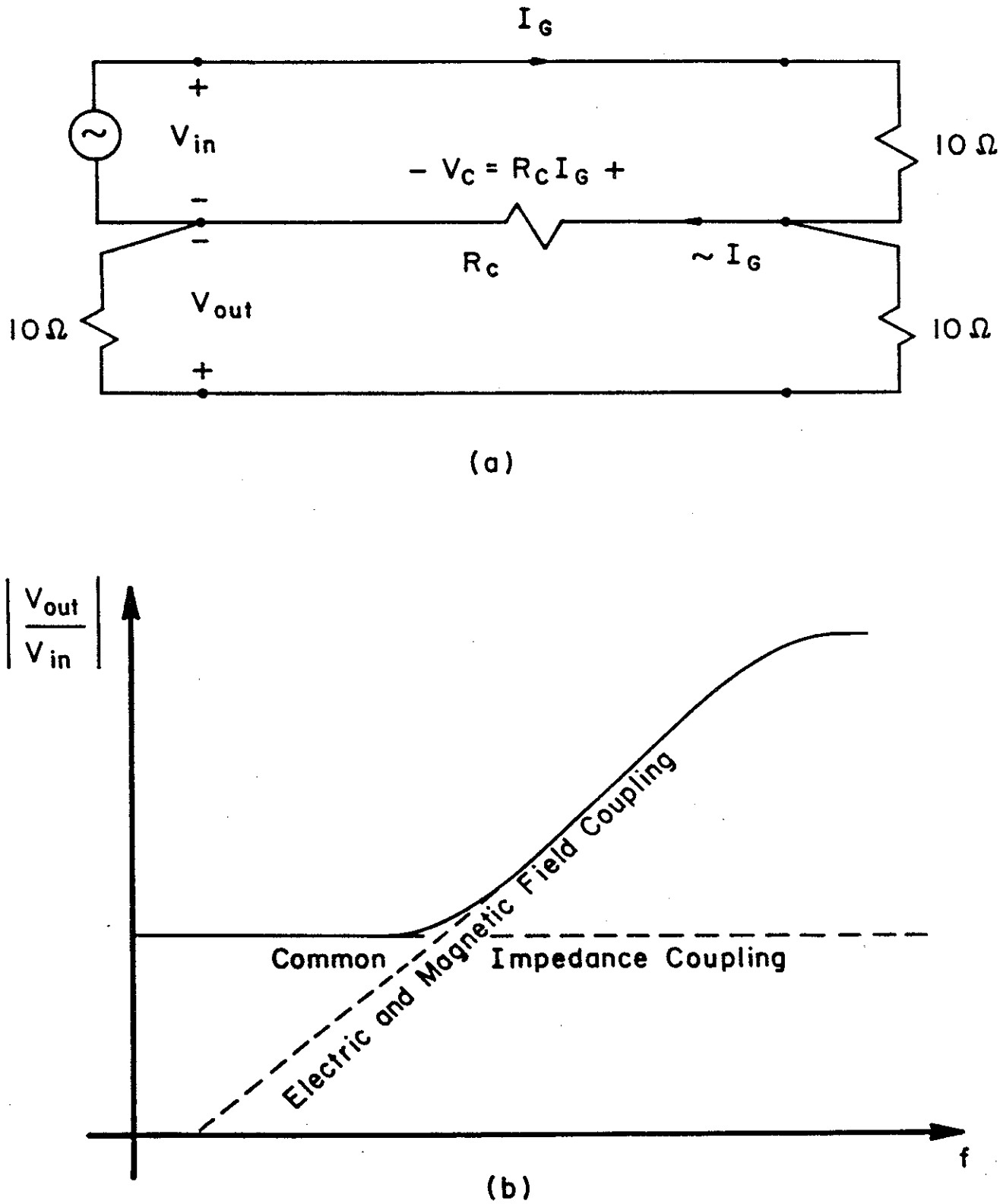
I_G
+
V_{in}
−
$-V_C = R_C I_G +$
10 Ω
−
R_C
$\sim I_G$
V_{out}
10 Ω
10 Ω
+
(a)
$\left|\frac{V_{out}}{V_{in}}\right|$
Electric and Magnetic Field Coupling
Common Impedance Coupling
f
(b)

Figure 4

ELECTROSTATIC DISCHARGE

by

Tony Nasuta
Westinghouse Electric Corp.

1. OBJECTIVE

To demonstrate how an electrically conductive surface in physical contact with a charged dielectric can be inconspicuously charged to very high voltages. The voltages can cause damage to semiconductor electronic devices such as microprocessors, operational amplifiers, and other electronic devices if the energy stored on the conductive surface is discharged through the device.

2. EQUIPMENT

A. Aluminum sheet, 1/8 inch thick, 1 to 2 square feet in area.
B. Wooden handle for aluminum sheet.
C. Crude spark gap consisting of two roundhead bolts 3/8 inch to 1/2 inch apart (or a neon lamp).
D. Teflon sheet having approximately the same dimensions as the aluminum sheet. A thickness of 1/4 inch will give some weight to the sheet and hold it in place.
E. Several feet of high voltage wire.
F. Low voltage hookup wire as needed.
G. Wool cloth.
H. Miscellaneous flathead wood and machine screws.

3. PROCEDURE

1. Using the materials described above, construct an aluminum plate with a sturdy wooden handle mounted on the top with countersunk flathead screws. No hardware can protrude from the bottom of the plate.
2. On a nonmetallic table construct a simple spark gap using the two bolts separated by 3/8 inch to 1/2 inch. Connect one side of the spark gap to earth ground. Using the high voltage wire, connect the other side of the gap to the top of the metal plate using a countersunk flathead screw such that no hardware protrudes through the bottom of the plate. (Or connect the neon lamp in place of the spark gap.)
3. Place the teflon sheet on the table. Connect a low voltage wire to earth ground and place near the teflon sheet on the table.
4. Rub the teflon briskly with the wool cloth.
5. Place the aluminum plate on top of the teflon sheet.
6. Momentarily ground the top of the aluminum sheet with the low voltage ground wire.
7. Quickly separate the aluminum plate from the teflon sheet and a spark will jump the spark gap formed by the bolts (or the neon lamp will flash).

4. THEORY

This experiment uses the principle of the Electrophorus Generator [1]. Referring to Figure 1(a). When the teflon plate is rubbed with the wool, the teflon becomes negatively charged. Placing the aluminum plate on top of the teflon causes the neutral charge on the plate to separate, − on top, + on the bottom as shown in Figure 1(b). When the plate is momentarily grounded (Figure 1(c)) the negative charge is conducted off the plate, leaving a net positive charge on the plate (Figure 1(d)). When the plate is quickly separated from the teflon sheet (FIgure 1(e)) a very high potential will develop on the plate causing the spark gap to fire. If an NRD voltmeter is available, voltages as high as 100 kV can be

measured if conditions are right. Very little of the negative charge on the teflon is removed in this process, and it may be used over and over to produce additional sparks.

Inadvertent contact of conductive surfaces with charged dielectric surfaces can induce charge and thereby impart a potential to the conductive surface. If the conducting surface were part of an electronics printed circuit board containing semiconductor devices, damage could occur in subsequent handling of the printed circuit boards. This demonstrates that care must be taken in handling and transporting such devices to prevent damage due to electrostatic discharge.

5. REFERENCES

1. **Van Nostrand's Scientific Encyclopedia**, Third Edition.

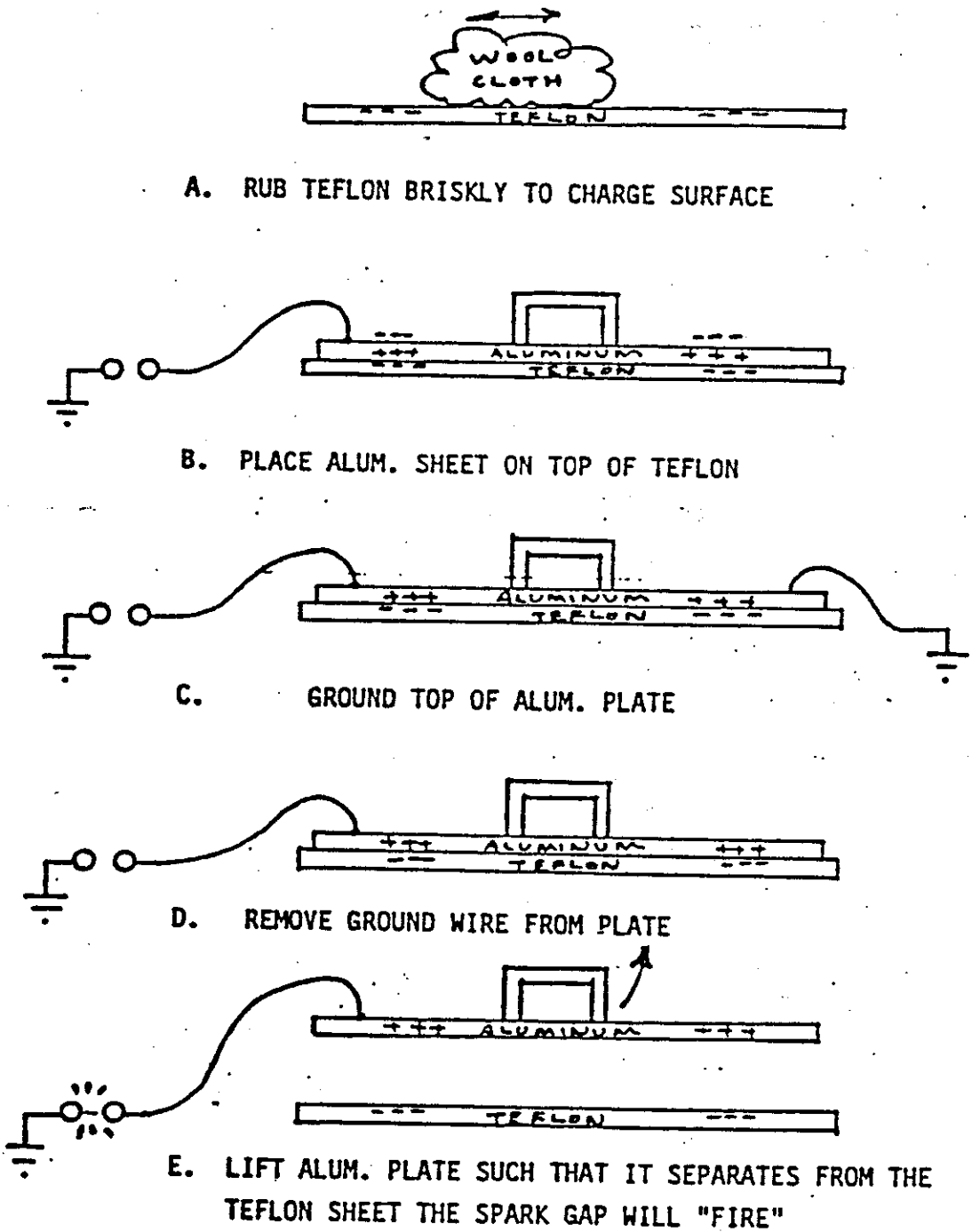

Figure 1. Electrostatic discharge experiment using Volta's electrophorous generator.

GROUND NOISE IN DIGITAL LOGIC

by

Henry W. Ott
Henry Ott Consultants

1. OBJECTIVE

To demonstrate the ground noise voltage generated by a single TTL logic signal flowing through a signal return conductor, and how it depends on the characteristics of the conductors and their physical configuration.

2. EQUIPMENT

A. TTL compatible crystal clock oscillator (any frequency between 2 and 10 MHz.). For example, a Motorola K1100A at 6 MHz.
B. Two 7400 (or 74LS00), quad two input NAND gate IC's.
C. A 4.5 to 5.5 volt battery.
D. Two 6 inch lengths of #18 gauge solid copper wire.
E. Miscellaneous hookup wire.
F. A vector board or breadboard to mount the circuits on.
G. Oscilloscope with a bandwidth greater than 50 MHz.
H. The following equipment is needed for the additional optional experiments listed below.

1. Two 6 inch lengths of #12 gauge bare copper wire.
2. Two 6 inch lengths of #24 gauge bare copper wire.
3. A 6 inch lenght of coaxial cable.

3. PROCEDURE

3.1 Construction

Using the materials listed above, construct the circuit shown in Figure 1. Use the two 6 inch lengths of #18 gauge wire to form a transmission line between the two 7400 IC's. Arrange the circuit such that the 18 gauge signal conductor can be moved to vary the spacing between it and the ground conductor from 1/8 inch to 3/4 inch.

3.2 Ground Noise Voltage

1. Space the 18 gauge signal and ground conductors 3/4 inch apart. Using the oscilloscope, measure the peak–to–peak voltage between two points, 4 inches apart, 2 inches apart, and 1 inch apart on the ground conductor.
2. Move the oscilloscope leads until they are 2 inches apart on the ground conductor and remeasure the voltage. Measure the voltage with the leads 1 inch apart.
3. Space the 18 gauge signal and ground conductors 1/8 inch apart. Using the oscilloscope, measure the voltage between two points, 4 inches apart, on the ground conductor.

3.3 Additional (Optional) Experiments

1. Replace the 18 gauge conductors with 12 gauge conductors (twice the diameter of 18 gauge) and repeat the above measurements.
2. Replace the 18 gauge conductors with 24 gauge conductors (half the diameter of 18 gauge) and repeat the measurements.
3. Replace the 18 gauge conductors with a 6 inch long coaxial cable. Make the shield terminations as short as possible. Measure the noise voltage between two points on the shield that are 4 inches apart.

4. THEORY

In order to minimize the ground noise voltage generated by the switching transients of digital logic the impedance of the signal return path must be minimized. In the case of digital logic, the frequencies of concern are not just the fundamental frequency of the signal but more importantly its harmonics. The square wave produced by a TTL logic gate has considerable energy content in the 10 to 100 MHz region. At these frequencies, it is the inductance of the signal return conductor that is most important. If signal return circuit impedance is to be minimized, the inductance must be minimized.

In order to reduce the inductance we must understand its dependence on the physical properties of the conductors. Inductance is a function of the natural logarithm of the conductor diameter. Due to this "log" relationship, it is difficult to achieve a large decrease in inductance by increasing the conductor size. In a typical case, doubling the diameter (an increase of 100%) will only decrease the inductance by about 20% [1]. Whenever possible, advantage should be taken of this effect, even if it is relatively small. If a large decrease in inductance is required, however, some other method of reducing inductance must be found.

As demonstrated in this experiment, inductance and therefore noise voltage is directly proportional to the length of a conductor. We can take advantage of this by minimizing the lengths of critical leads. For example, those carrying large transient currents such as clock leads. This is not a universal solution however, since some leads must be long in a system.

Another important method of reducing inductance, demonstrated by this experiment, is to minimize the area of the loop enclosed by the current flow. Two conductors carrying current in opposite directions (such as the signal and ground leads) have a total inductance L equal to

$$L = L_1 + L_2 - 2\,L_m$$

where L_1 and L_2 are the self–inductances of the two individual conductors and L_m is the mutual inductance between them. In order to minimize the total inductance of the complete current path, the mutual inductance between the conductors must be maximized. Therefore, the two conductors should be placed close together (minimum area between them).

If the coefficient of magnetic coupling between the two conductors were unity, the mutual inductance would equal the self inductance and the total inductance of the closed loop would be zero. At high frequencies a coaxial cable approaches this ideal condition. Placing forward and return current paths close together, therefore, is a very effective method of reducing inductance. This can be accomplished by using a tightly twisted pair of a coaxial cable.

Additional information on the concept of digital grounds can be obtained from reference [2].

5. REFERENCES

1. Ott, H.W., **Noise Reduction Techniques in Electronic Systems**, Page 128, Table 5–3, John Wiley & Sons, 2nd Edition, 1988.

2. Ott, H.W., "Digital Circuit Grounding and Interconnection", **1981 IEEE International Symposium on Electromagnetic Compatibility**.

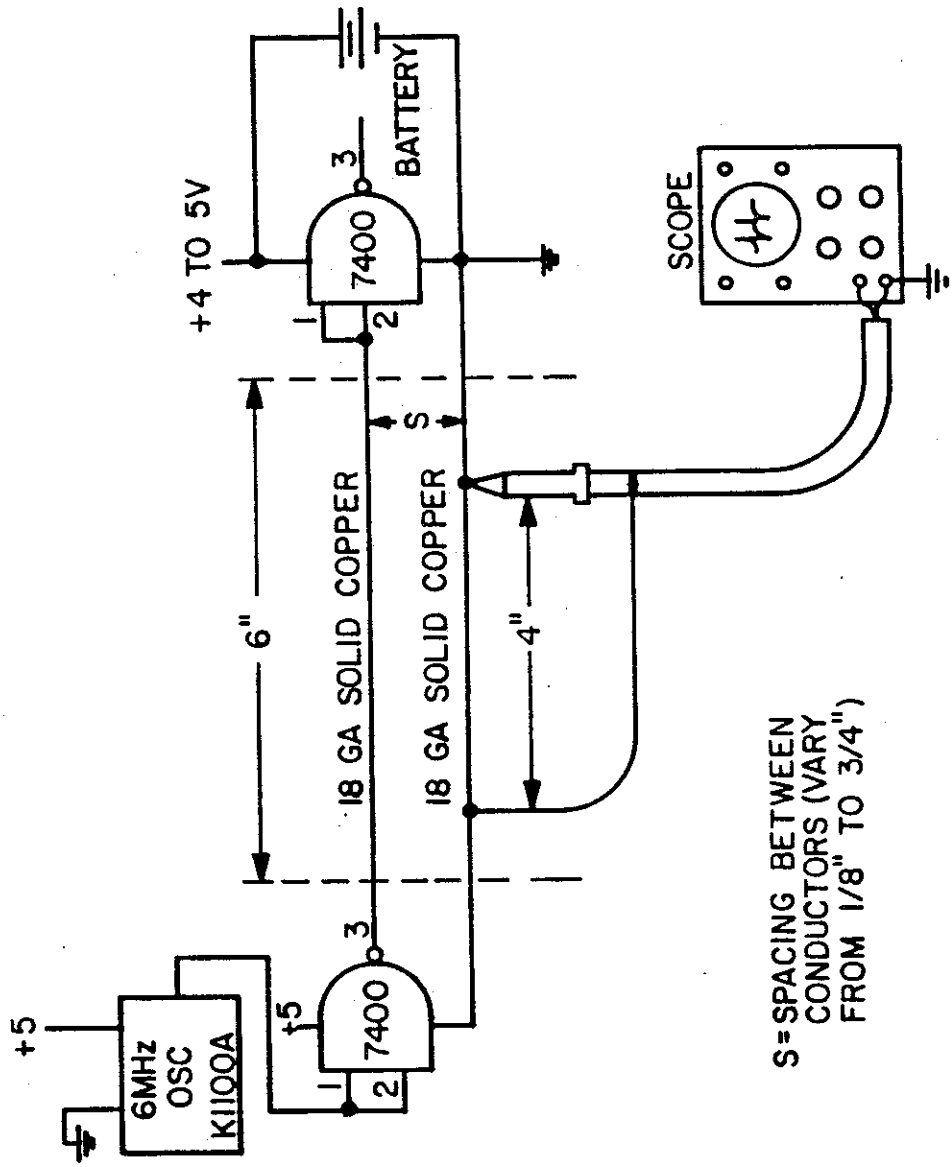
+4 TO 5V
7400
BATTERY
SCOPE
6"
18 GA SOLID COPPER
S
18 GA SOLID COPPER
4"
+5
6MHz
OSC
K1100A
+5
7400
S=SPACING BETWEEN
CONDUCTORS (VARY
FROM 1/8" TO 3/4")

Figure 1

"RUSTY BOLT" DEMONSTRATOR*

by

Raymond F. Elsner
Martin Marietta Aerospace

1. OBJECTIVE

To demonstrate the interference potential of random, natural nonlinear junctions between two pieces of lightly–contacting metal ("rusty bolts"). This "rusty bolt" phenomenon has generated severe interference in such diverse environments as ships [1] and large reflector antennas [2] and has been utilized in special radars [3].

2. EQUIPMENT

A. Ordinary pocket AM transistor radio modified as described below.
B. Two 6 inch leads with alligator clips.
C. One 1000 ohm resistor.
D. Rusted nut and bolt combination in which the nut can still turn on the bolt.

(Because of the variability of actual rusted bolts it is sometimes expedient to use less–critical substitutes for demonstration purposes. Ordinary long–nose or side–cutting pliers, of the type used for electronics work, are much less critical examples. The nonlinear junction ("rusty bolt") occurs in the joint between the two pieces of hardened metal. Other useful combinations that can be used are loosely contacting metal objects such as chain links, screwdriver blades, aluminum pieces, brass hardware, etc..

3. PROCEDURE

1. Modify the AM radio by removing the second detector semiconductor diode and solder the two 6 inch leads in its place. (Some newer radios do not have a discrete second detector diode. Rather it is contained in an integrated circuit. In this case, the experiment cannot be done with this type of radio.)
2. Connect the removed second detector diode between the alligator clips (Figure 1) and the radio plays normally. Observe polarity of the diode. Distortion will occur with improper polarization because dc bias is used on the semiconductor diode.
3. Observe that the radio will not play when the leads are open, shorted, or terminated in a resistor.
4. Connect one lead to the rusty bolt and the other to the nut. Turn the nut on the bolt until the radio plays, usually with reduced volume. Be sure that low–resistance connections are made to the bolt and nut. The alligator clips may be applied to cleaned sections of the nut and bolt or, if desired, short wires may be soldered to the nut and bolt to facilitate testing. If pliers are used in place of the "rusty bolt", connect the clips to the handles of the pliers. Open and close the pliers slowly until the radio plays.

---

* This demonstration was adapted from an article that originally appeared in the IEEE Transactions on Electromagnetic Compatibility, Vol. EMC–24, No. 4, Nov. 1982.

4. THEORY

1. The fact that the radio plays when the "rusty bolt" is connected across the leads demonstrates the nonlinearity of the "rusty bolt". The "rusty bolt" is not a diode per se, but is a more–or–less symmetrical nonlinearity (Figure 2) having a metal–oxide–metal or metal–oxide–oxide–metal configuration.

A rusted–shut nut or bolt combination is usually either open–circuited or shorted; however, a rusty combination in which the nut can be turned can usually be adjusted to produce rectification. This adjustment is usually critical and, when operationg as desired, is usually very sensitive to physical pressure. This demonstrates why "rusty bolt" generated harmonics and intermodulation products are usually extremely noisy and erratic in level.

5. REFERENCES

1. Elsner, R.F. et al.,"Environmental Interference Study Aboard a Naval Vessel",**1968 IEEE Electromagnetic Compatibility Symposium.**

2. Higa, W.H., "Spurious Signals Generated by Electron Tunneling on Large Reflector Antennas",**Proceedings IEEE**, Vol. 62, No. 2, Feb. 1975.

3. Optiz, C. L., "Metal–Detecting Radar Rejects Clutter Naturally", **Microwaves**, pp. 12–14, August 1976.

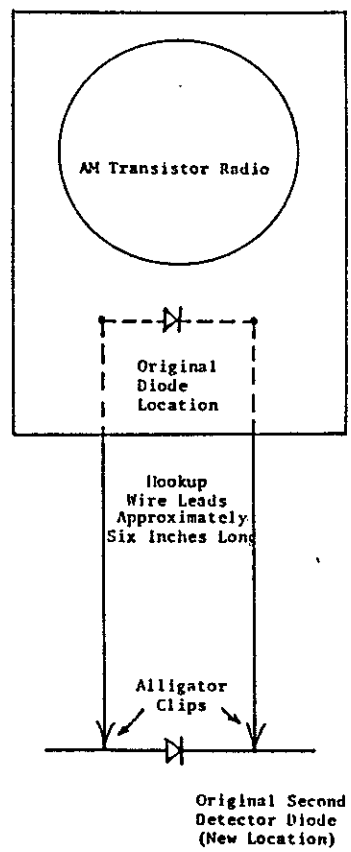

Figure 1. Transistor radio modification.

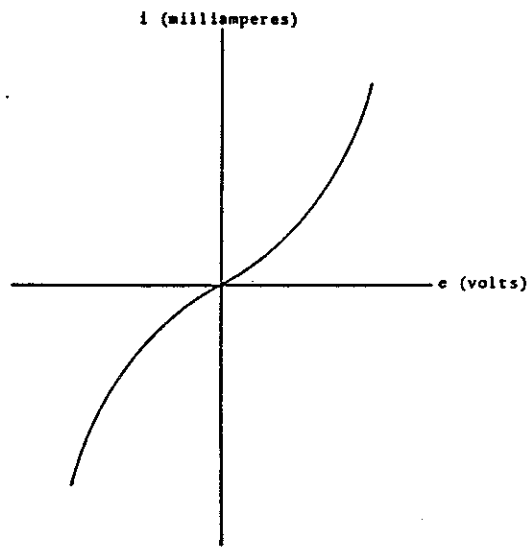

Figure 2. "Typical" nonlinear voltage-current characteristic curve.

NOISE MEASUREMENT BY INDUCTION

by

Douglas C. Smith
AT&T Information Systems Laboratories

1. OBJECTIVE

To demonstrate how to trace noise voltages and currents in circuits without direct connection to the circuit.

2. EQUIPMENT

A. Pulse or function generator capable of driving at least 10 mA peak into a 50 ohm load with rise times on the order of tens of microseconds. Faster rise/fall times give better results.

B. Dual trace oscilloscope with at least 50 MHz bandwidth.

C. One length of 50 ohm coax cable with a BNC connector on one end.

D. Two 50 ohm terminations such as Tektronix part #011–0049–01.

E. Seven feet of insulated solid copper hookup wire (18 to 22 gauge).

F. A 50 ohm 1 watt carbon or metal film resistor (47 to 53 ohms acceptable).

3. PROCEDURE

3.1 Measurement of Noise Signal

1. Form a length of the wire into a square loop one inch on a side having two turns. This loop will be used to pick up or measure the magnetic field produced by the wire currents. Connect the leads of this square loop to the free end of one coax cable and the other end to the input of an oscilloscope through the 50 ohm termination.

2. Use about two feet of the hookup wire and a 50 ohm resistor to form a circuit as shown in Figure 1. The dimensions are not critical. Connect this circuit to the second coax cable. Connect the other end of this coax to the pulse generator. Connect the second scope input to the output of the pulse generator and set the scope to trigger on this waveform.

3. Set the function generator to produce repetitive 50% duty cycle pulses with a repetition frequency between 100 kHz and 1 MHz (10 ns to 50 ns rise/fall times). Set the generator for an amplitude of 5 V p–p on the oscilloscope.

4. Place one side of the square measurement loop next to and parallel to the wire carrying the function generator current. The scope trace should look like Figure 2. Adjust the oscilloscope sensitivity to give a reasonable picture of the voltage of the pickup loop. Note the shape of the trace. Slowly rotate the loop 180 degrees while holding it against the signal wire. Note how the trace goes to zero at 90 degrees and reverses phase as the loop passes 90 degrees.

3.2 Noise Source Tracing

1. Connect the function generator to the circuit shown in Figure 3. Make a second square pickup loop and connect to the scope input that was connected to the generator output. Use coax cable (50 ohm) and a 50 ohm termination as was used for the first loop. Adjust the scope sensitivity for best viewing. If the trace goes off screen during the experiment, reduce the sensitivity as appropriate.

2. Place one loop (fixed loop) next to the grid as shown in Figure 4 and trigger on this waveform. Move the second loop (movable loop) along the bottom of the grid. Note the phase reversal on the trace associated with the moving loop as the loop passes the branch

containing the "noise" source.

4. THEORY

The voltage induced in the pickup loop is

$$v_{induced} = N\,M\,\frac{di}{dt}$$

where i is the current in the signal path, N is the number of turns of the pickup loop, and M is the mutual inductance between the pickup loop and the loop carrying the current. Therefore, the waveshape of the voltage induced into the pickup loop is equal to the derivative of the current in the signal path as shown in Figure 3. Thus the induced voltage of the measurement loop is related to the slope (rise or fall time) of the current waveform.

The sign of the mutual inductance M depends on the relative orientation of the pickup loop and the loop carrying the current i. This is because the magnetic flux caused by the current i forms concentric circles around i with the direction of this flux given by the right–hand rule. The flux threads the area formed by the measurement loop and induces a voltage in that loop (the measured voltage). The polarity of this induced voltage is determined by Lenz's law[1]. If either (1) the loop is rotated 180 degrees, or (2) the current direction is reversed, the polarity of the measured voltage will reverse. In Figure 4, moving the measurement loop from left to right causes the magnetic flux from the (signal) current that threads the loop to reverse polarity and hence the induced voltage reverses polarity.

The interference potential of currents is related more to the pulse rise/fall times than to the repetition rate of the pulse train. Increasing rise/fall time can have a direct correlation with reduced noise emissions. Since the magnitude of the voltage induced in the pickup loop is directly related to pulse rise/fall times, this indirect sampling method can be used to see whether circuit modifications have resulted in increased rise/fall times.

Another application would be to find a source of noise in a system. Consider the generator in the circuit of Figure 4 to be a noisy IC (possibly caused by an open decoupling capacitor) pumping noise currents onto the ground system. If the loop is moved along the bottom conductor in Figure 4, the branch containing the noisy IC can be detected by the phase reversal of the pickup voltage when that branch is passed.

4. REFERENCES

1. C.R. Paul and S.A. Nasar,**Introduction to Electromagnetic Fields**,McGraw–Hill, Second edition, 1987.

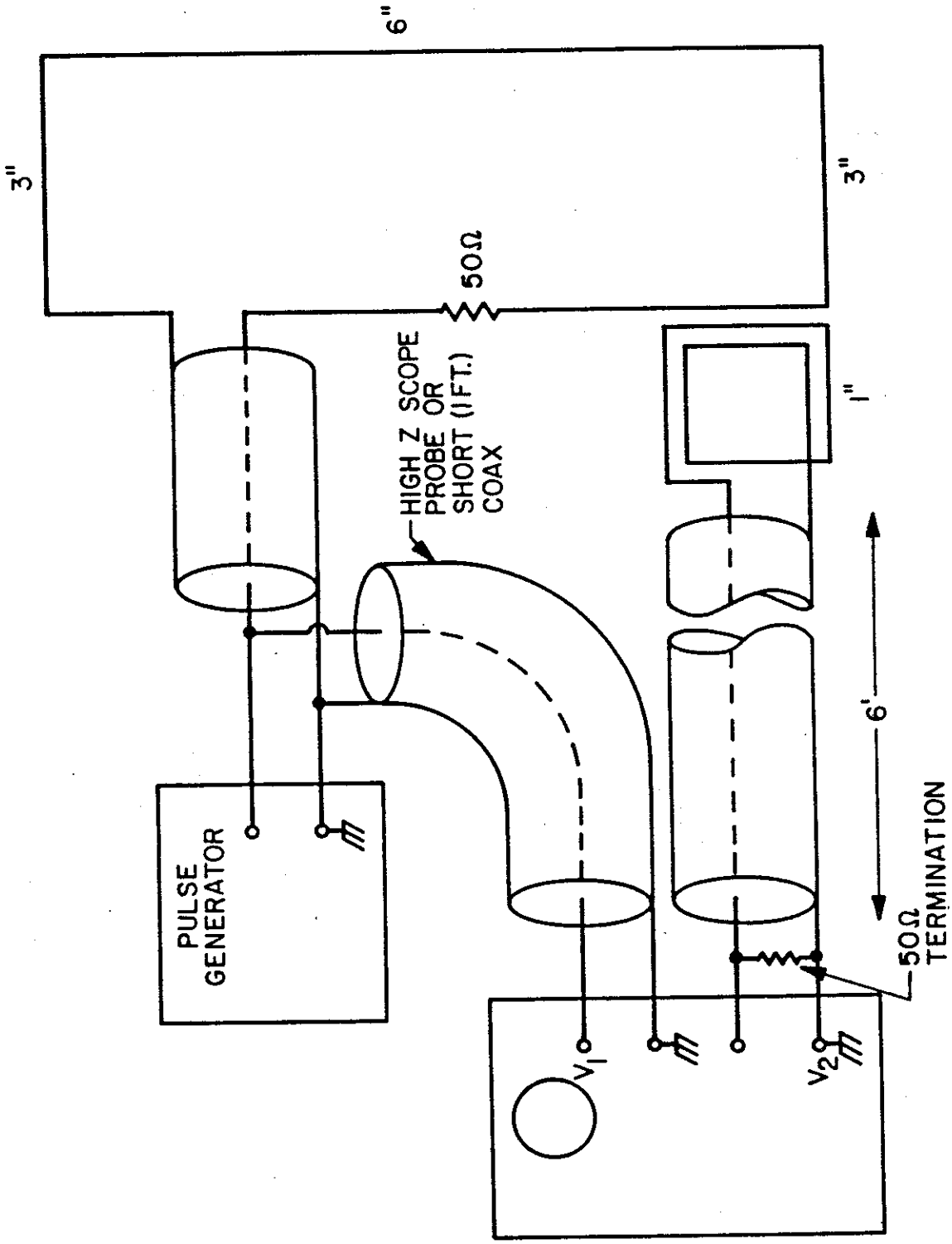
6"
3"
3"
50Ω
HIGH Z SCOPE
PROBE OR
SHORT (1FT.)
COAX
1"
6'
PULSE
GENERATOR
50Ω
TERMINATION
V1
V2

Figure 1

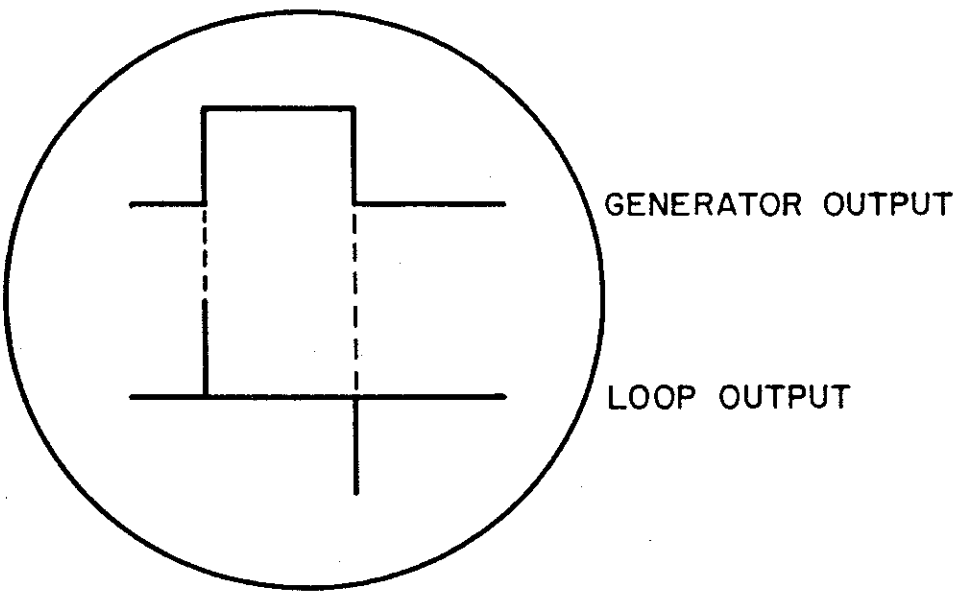

Figure 2

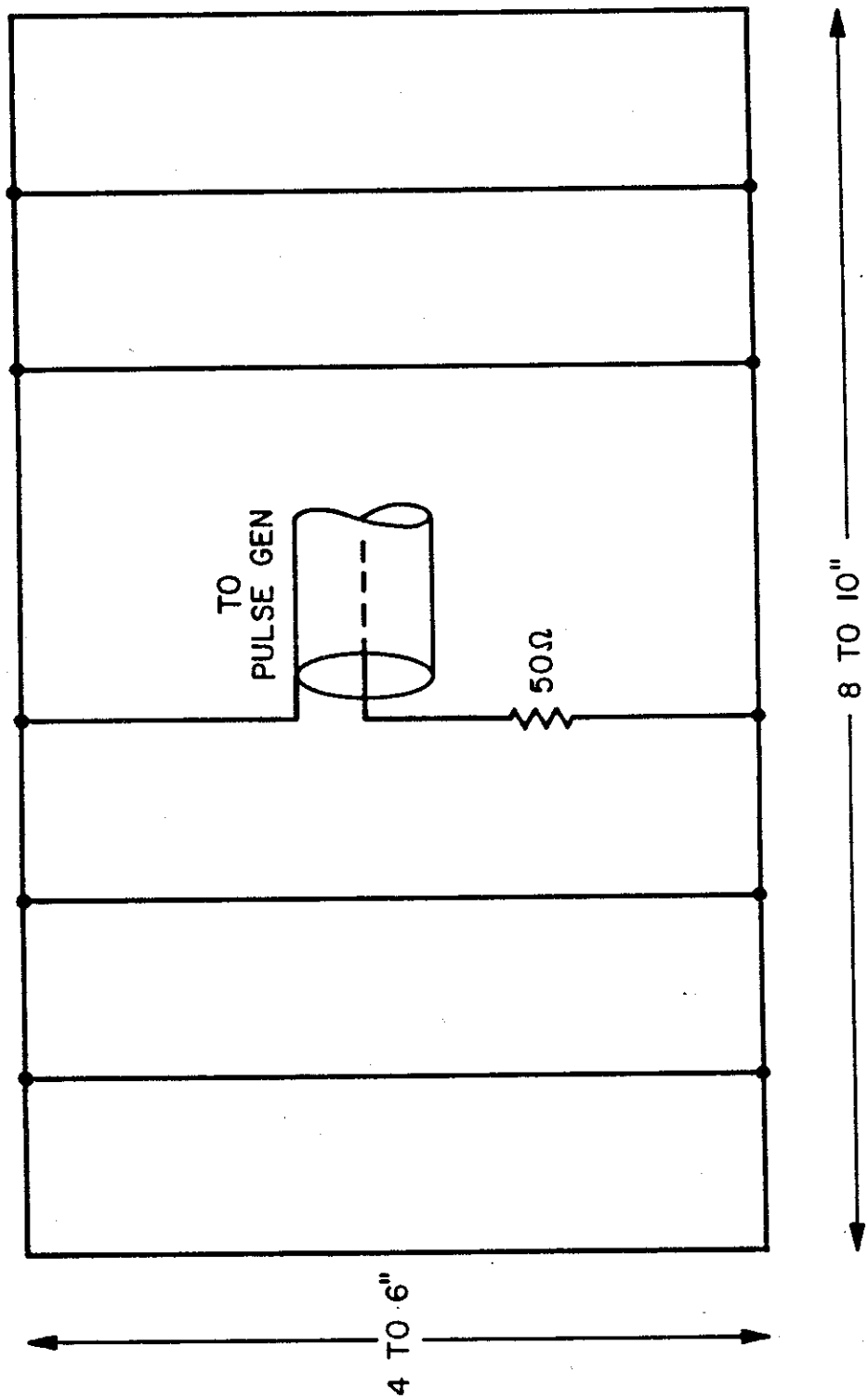

Figure 3

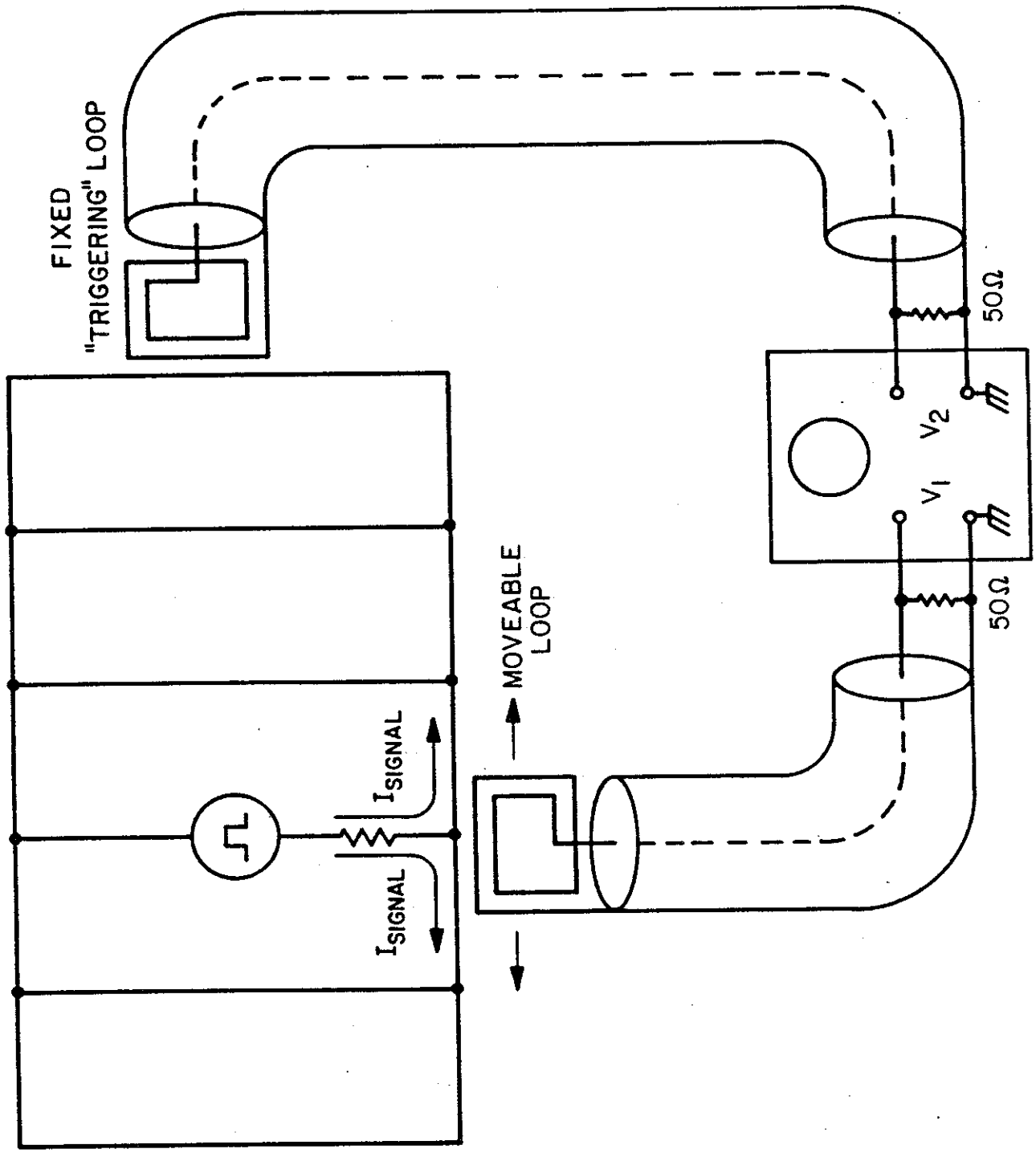
FIXED
"TRIGGERING" LOOP
MOVEABLE
LOOP
I_{SIGNAL}
I_{SIGNAL}
V_1
V_2
50Ω
50Ω

Figure 4

THE THINKING ENGINEER'S VOLTAGE MEASUREMENT

by

Andy Marvin
Department of Electronics
University of York
United Kingdom

1. OBJECTIVE

This experiment demonstrates that the measurement of a time–varying voltage requires some thought and understanding. It shows some of the pitfalls that the unwary engineer (EMC or otherwise) can fall into.

On the dual trace oscilloscope, two different voltage traces appear from two identical probes connected to the same pair of terminals. The relative amplitude of these voltage traces can be adjusted without altering the oscilloscope settings.

The experiment is an illustration of the standard Maxwell equation embodying Faraday's Law of induction (curl $\mathbf{E} = -\frac{d\mathbf{B}}{dt}$) and Kirchhoff's voltage law. A simple circuit is required which must be enclosed in a plastic box.

The experiment is more effective if the student has to deduce how it works rather than it being immediately apparent. The student needs to understand and apply fundamental electromagnetics in order to solve the problem.

2. EQUIPMENT

A. Sinusoidal oscillator (up to 100kHz) with preferably at least 20V p–p open–circuit voltage.
B. Dual trace oscilloscope with external trigger facility operating up to 100kHz.
C. Two *identical* oscilloscope probes.
D. "Curly Box" (meaning curlE box) as described below.
E. Coaxial connecting cables.

Curly Box Construction
The following components are required. None is critical.
(1)Plastic circuit box, approximate dimensions 3"(7.6cm)×6"(15.2cm)×4"(10.2cm),
(2)AM radio ferrite antenna (rod with coil),
(3)panel mounting coax socket–type, impedance, etc. not critical at these frequencies, but this works best when circuit connections are shielded,
(4)1kΩ resistor–carbon or film, 1/8 Watt is adequate,
(5)5kΩ linear or log single turn carbon of film potentiometer with knob, and
(6)two through panel terminals.
The construction of the "curly box" is illustrated by the circuit and layout diagrams shown in Figures 1,2 & 3.

3. PROCEDURE

1. Connect the apparatus as indicated in Figure 4 with the potentiometer set to around 1kΩ. A frequency of 20kHz gives suitable results and cannot easily be heard if any magneto–strictive effects are present to cause acoustic noise. As the device operates as a step–down transformer, an input of several volts to the curly box is required to give tens of millivolts at the oscilloscope inputs. The traces on the oscilloscope should be of equal amplitude but in antiphase.
2. Turn the knob and observe the amplitudes and relative phase of the traces.
3. Explain the observations!

4. THEORY

Consider the loop formed by the 1kΩ resistor and 5kΩ pot shown in Figure 5(a). Some of the magnetic flux passes through the loop. This induces an electromotive force or emf in that loop according to Faraday's Law [1]:

$$\text{emf} = -\frac{d\phi}{dt} \tag{1}$$

where ϕ is the total flux penetrating the loop. If we assume that the terminals, T1 and T2, for attachment of the oscilloscope probes are at the center of the loop, the induced emf can be divided into two equal voltage sources as shown in Figure 5(a). The voltage between the two oscilloscope probe attachment points is denoted as Vt. Using voltage division, the voltage developed between these terminal points is

$$\begin{aligned} Vt &= \frac{1}{2}\,\text{emf} + \underbrace{\left[-\frac{R1}{R1+R2}\right]\text{emf}}_{V1} \\ &= -\frac{1}{2}\,\text{emf} + \underbrace{\left[\frac{R2}{R1+R2}\right]\text{emf}}_{V2} \\ &= \left[\frac{R2-R1}{R1+R2}\right]\frac{\text{emf}}{2} \end{aligned} \tag{2}$$

where R1=1kΩ and R2=5kΩ (variable). Observe that if R1=R2, then the voltage between the probe attachment points, Vt, is zero. If R2 is varied between 0Ω and ∞Ω, Vt can be made to change phase 180^0 while the magnitude of Vt is $\frac{\text{emf}}{2}$ at these extremes. This observation is evident directly from the circuit in Figure 5(a).

Now consider attaching the two oscilloscope probes as shown in Figure 5(b). Let us assume that the input impedance to the two scope probes is infinite. Magnetic flux penetrates the loops formed by the scope probes, loop 1 and loop 2, inducing emf's, emf1 and emf2, in the loops. The measured oscilloscope voltages, E1 and E2, then become

$$E1 = Vt - \text{emf1} \tag{3a}$$

$$E2 = Vt + \text{emf2} \tag{3b}$$

The positions of the scope probes and associated loop areas affect the emf's, emf1 and emf2, and hence the voltage read by the scope inputs, E1 and E2. If we assume that the two

probe loop areas are equal, emf1=emf2=emfprobe and (3) becomes

$$E1 = Vt - emfprobe \tag{4a}$$

$$E2 = Vt + emfprobe \tag{4b}$$

If the 5kΩ pot is set to 1kΩ, (2) shows that Vt=0 so

$$E1 = -emfprobe \tag{5}$$

$$= -E2 \qquad R1=R2=1k\Omega$$

and the oscilloscope voltages will be antiphase.

Now suppose that R2 is set to any value other than 1kΩ. Equation (4) shows that the oscilloscope voltages will not be equal with the difference depending on the relative magnitudes of Vt and emfprobe.

The engineering student is usually puzzled by two different, i.e. antiphase, voltages measured by two identical probes connected to the same terminals. At this stage the average engineering student will examine the oscilloscope settings, probe calibration, etc. and declare the oscilloscope unserviceable (*engineers think volts have to come out of terminals*). The good engineering student will do the examination of the oscilloscope, etc. and then start to think. A physics student will go straight to this stage (*physics students can't use oscilloscopes*)!

The operation of the circuit is dependent on the layout of the oscilloscope probes. The experiment is best setup before the student sees it. You can decide how much the student is allowed to move or touch the experiment in the course of his observations. For example, placing both of the oscilloscope probes on the same side of the terminals results in identical readings on both traces. Some find this a valuable clue!

5. REFERENCES

1. J.D. Kraus, **Electromagnetics**, third edition, McGraw–Hill, NY, 1984.

Fig 2 Component Layout Top View

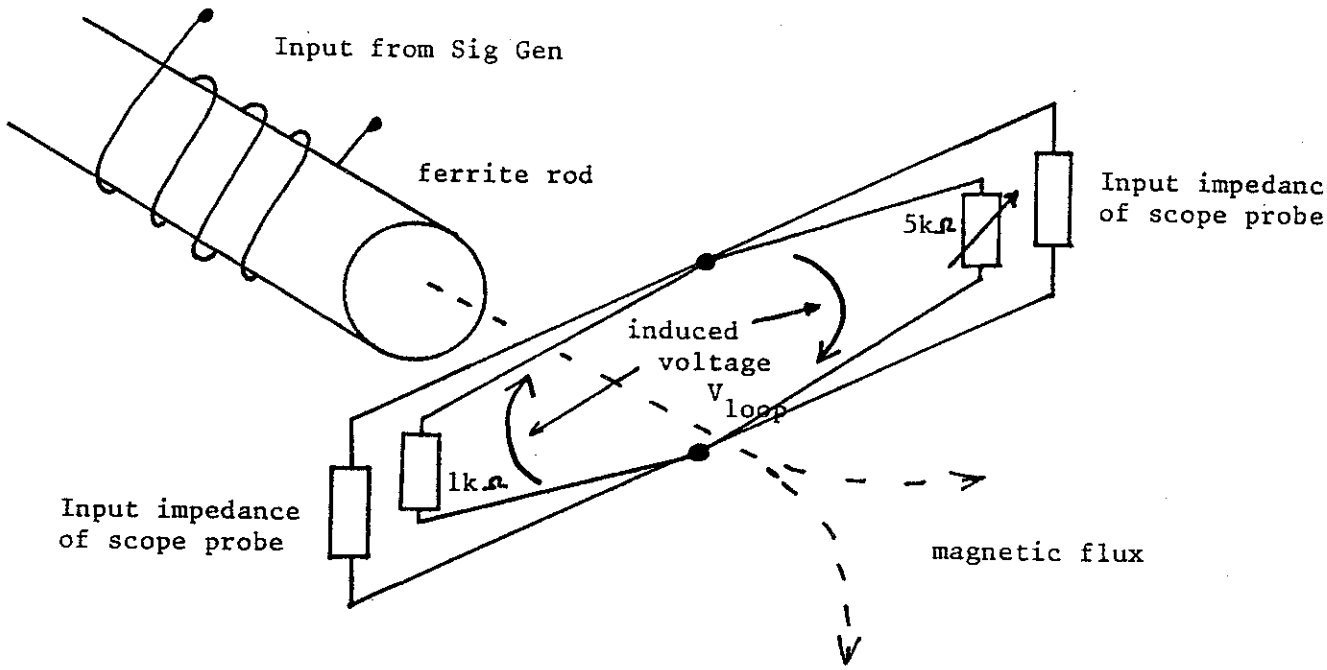

Fig 1 Circuit Diagram

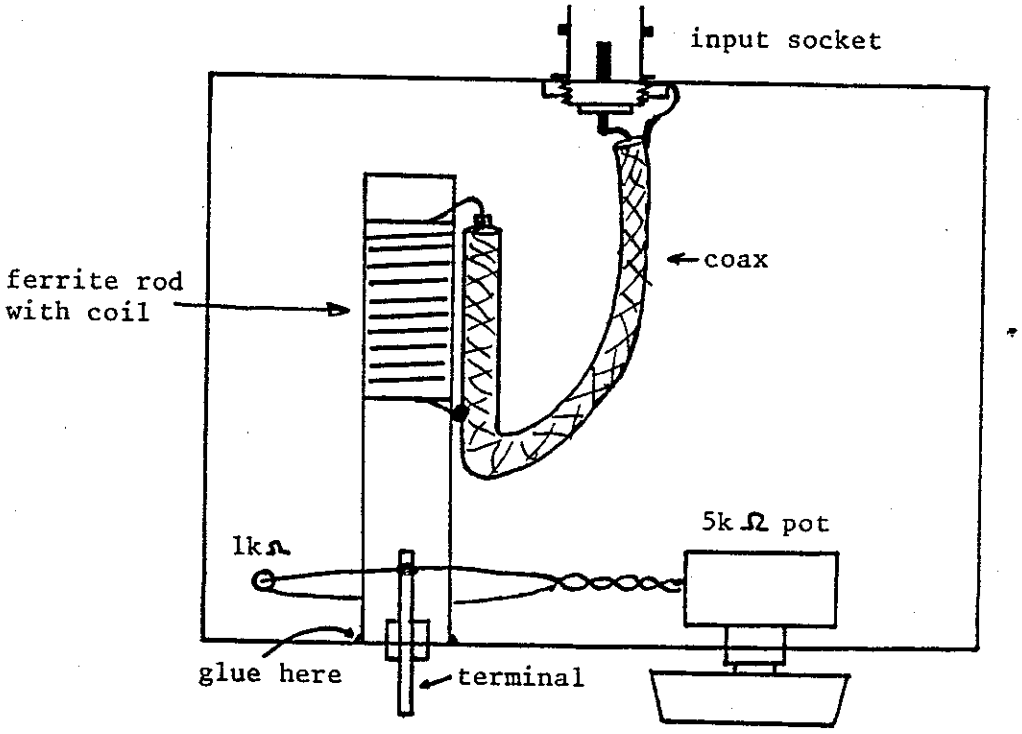

Fig 4 Experiment Layout

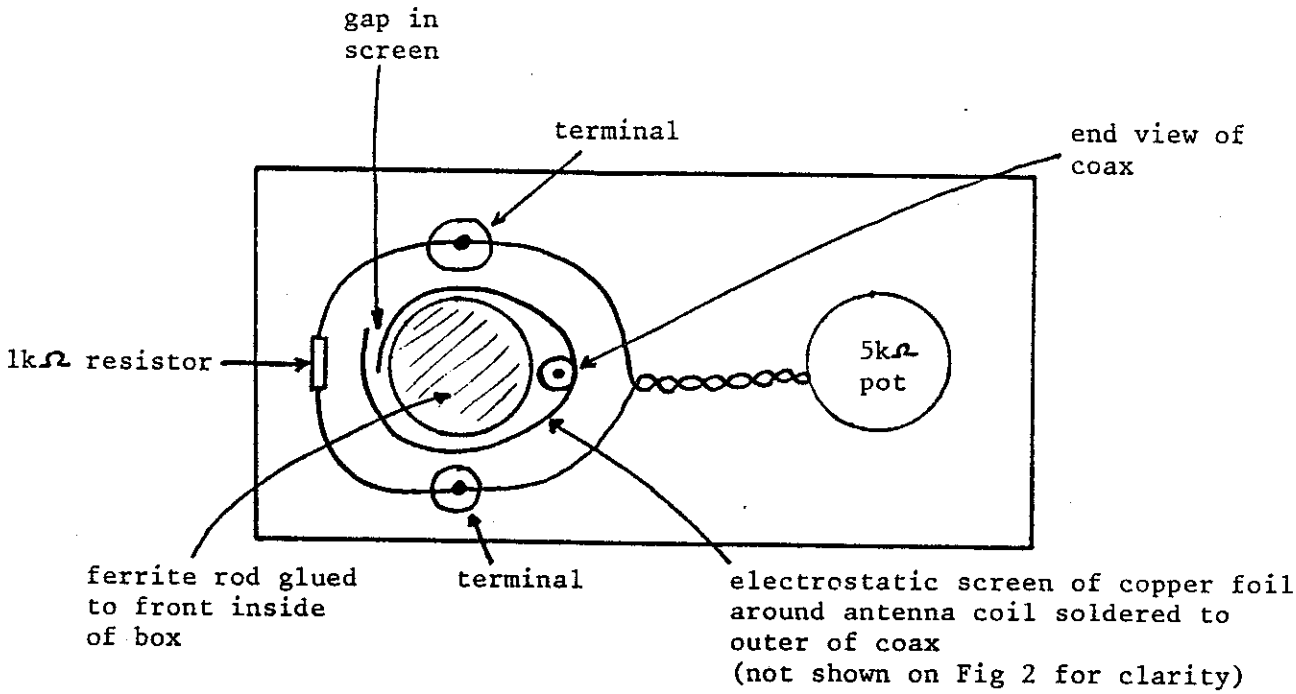

Fig 3 View of Component Arrangement through Front Face of Box

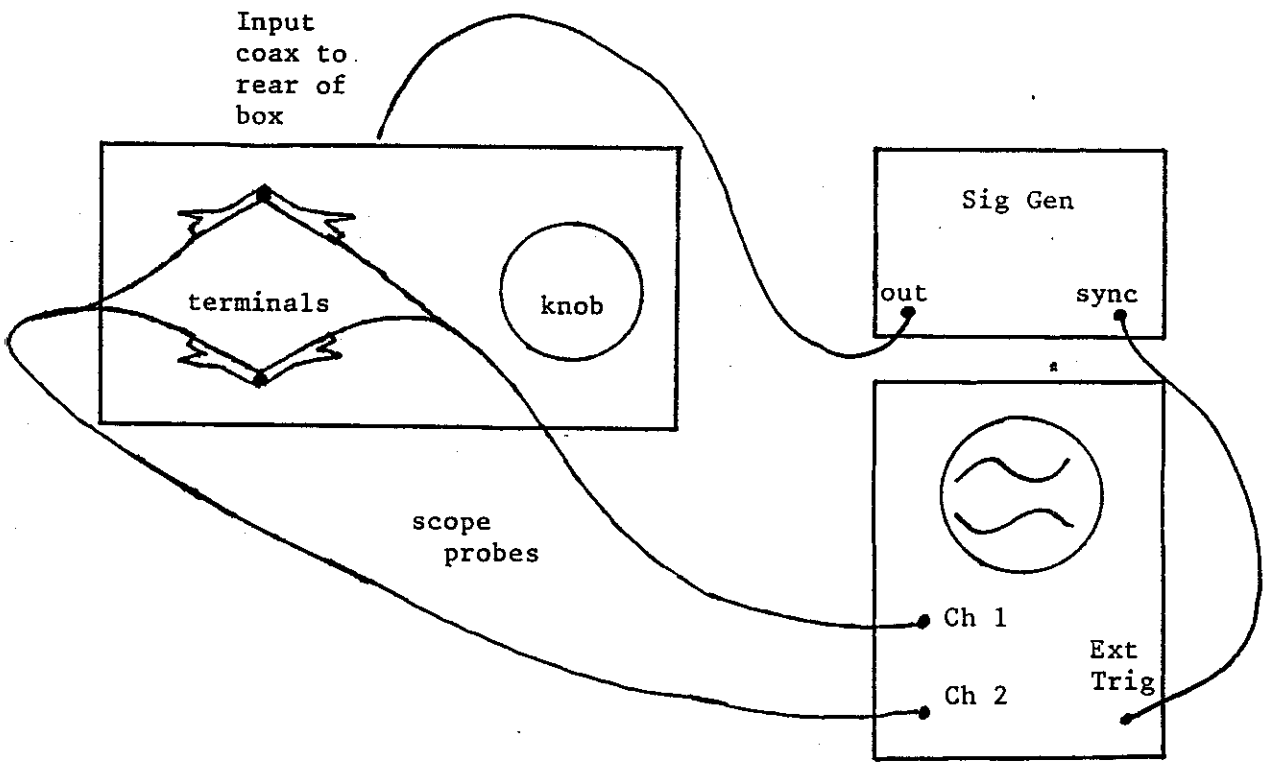

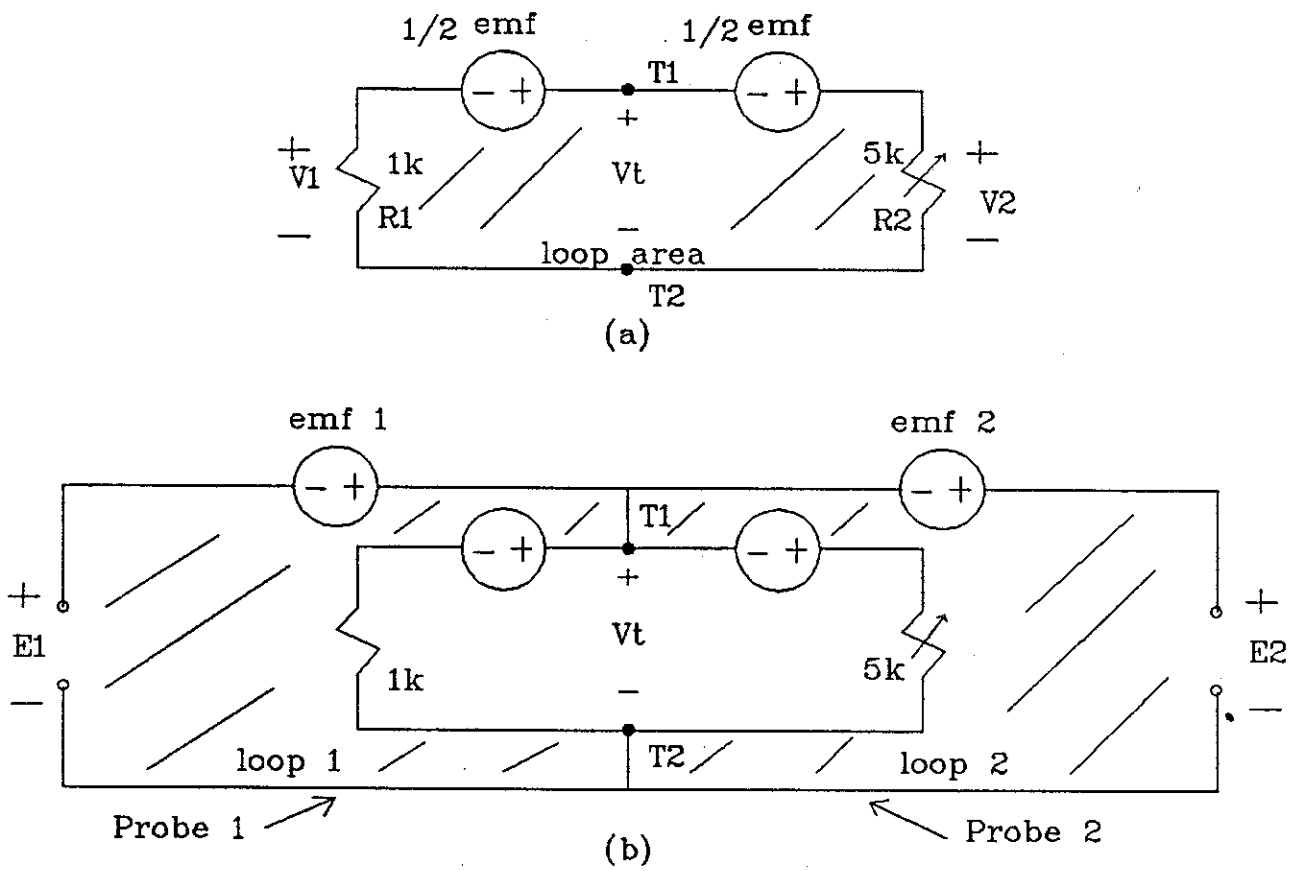

Fig. 5. Illustration of the effect of induced emf's.

THE EFFECT OF CIRCUIT IMPEDANCE ON FIELD–COUPLED CROSSTALK

by

Thomas A. Jerse
Department of Electrical Engineering
University of Kentucky
(formerly with the Hewlett Packard Co.)

1. OBJECTIVE

To understand the effect of circuit impedance on the magnitude and type of field–coupled crosstalk.

2. EQUIPMENT

A. Sinusoidal oscillator with a nominal 50Ω source impedance and at least $10V_{p-p}$ open–circuit voltage at 1MHz.
B. Dual–trace oscilloscope with a minimum bandwidth of 20MHz.
C. Ohmmeter.
D. Standard appliance cord (2 sections, 2 meters long each).
E. 500Ω non–inductive variable resistor.
F. 330Ω carbon resistor (1/4 W).
G. 10Ω carbon resistor (1/4 W).

3. PROCEDURE

3.1 Electric–field coupling

1. Using figure 1a as a guide, fix one length of appliance cord flat to a non–metallic table. The far end of the cable should be left open circuited.
2. Solder the 10Ω resistor in series with the near end of the cable.
3. On the table, fix the second length of cord parallel to the first, placing them as close together as the insulation will allow.
4. Solder the 500Ω variable resistor across the far end of the second cable. Choose the resistor terminals such that a full counter–clockwise rotation of the shaft places the minimum value of resistance across the cable.
5. Solder the 330Ω resistor across the near end of the second cable.
6. Set the oscillator to a frequency of 1MHz and connect it to the 10Ω resistor at the near end of the first cable.
7. Connect the oscilloscope across the near end of the first cable and adjust the amplitude of the oscillator for a reading of $10V_{p-p}$.
8. Connect the other channel of the oscilloscope across the 330Ω resistor at the near end of the second cable.
9. Set the variable resistor to its minimum value by turning its shaft fully counter–clockwise.
10. Measure the net parallel resistance across the second cable with an ohmmeter. (The result encompasses the parallel combination of the 330Ω resistor with the variable resistor.)
11. Using the oscilloscope, measure the amplitude, V_1, of the signal at the near end of the first cable.
12. With the other channel of the oscilloscope, measure the amplitude, V_2, of the signal coupled to the second cable.

13. Compute the voltage transfer function $|V_2/V_1|$ and tabulate the result.

14. Turn the variable resistor shaft fully clockwise to set the net resistance to its maximum value and repeat steps 10 through 13.

15. With the variable resistor set for maximum coupling, place your hand over a section of the two cables so close that you touch the insulation. Take care that you do not alter the spacing between the cables. Note the change in the transfer function.

3.2 Magnetic–field coupling

1. As shown in figure 1b, modify the set–up of the previous experiment by twisting the leads at the far end of the first cable together to form a short circuit. In addition, move oscilloscope probe A to the other side of the 10Ω resistor.

2. Using steps 9 through 14 of procedure 3.1, measure the transfer function of the crosstalk for the minimum and maximum settings of the variable resistor.

3. Adjust the variable resistor for maximum coupling. As in step 15 of procedure 3.1, use your hand to cover a section of the two parallel cables without varying the cable spacing and record the change in the transfer function.

4. THEORY

The source in procedure 3.1 excited primarily electric fields because it drove an open circuit. Most of the energy was in voltage; very little current flowed at this test frequency where the cable is somewhat shorter than a wavelength. Electric–field coupling is a high–impedance phenomenon. It can be thought of as occurring through a small–valued mutual capacitor, C_{12}, between the lines. The mutual capacitance presents a large reactance at low frequencies. Because it is a high–impedance source, the electric field coupled from the first cable can be modeled as a frequency–dependent current source injected into the second cable. (See figure 2a.) The voltage produced by the current source maximizes when the net resistance to ground $(R_1 \| R_2)$ on the second line is largest.

Conversely, the source in procedure 3.2 excited primarily magnetic fields because the short placed at the far end of the first cable in step 1 forced most of the energy into current. Some of the magnetic flux produced cut through the loop of the second cable to generate a low–impedance voltage source in series with the line. (See figure 2b.) The mutual inductance, M_{12}, directly controls the coupling because it gauges the proportion of magnetic flux lines that flow through the loop of the second cable. The resulting current induced in the second cable is largest when the net resistance in that circuit (R_1+R_2) is smallest. In this way, the largest voltage across the 330Ω resistor at the near end of the line appeared for the minimum setting of the variable resistor.

Covering a section of the cable with the experimenter's hand (a high–impedance element) essentially added another mutual capacitor between the two cables. This act had little effect on the magnetic–field coupling because this additional high–impedance path does not provide an effective avenue for the low–impedance magnetic fields. By contrast, the hand enhanced electric–field coupling because some of the field coupled from the source to the hand and subsequently to the cable. The mutual capacitance provided by the hand combined in parallel with the existing mutual capacitance to boost the overall coupling.

The simple coupling model illustrated in figure 2 applies to low frequencies where the coupled lines are somewhat shorter than a wavelength as was the case in this experiment. A more general model can be found in the referenced paper by C.R. Paul.

The relatively high characteristic impedance of the appliance cord limits the maximum

frequency at which this experiment can demonstrate the difference between the electric and magnetic coupling. With the cable lengths specified, it is difficult in procedure 3.2 to make most of the energy in the first cable flow as current above 1MHz because the shorted cable presents a significant impedance to the generator.

5. REFERENCES

1. Ott, H.W., **Noise Reduction Techniques in Electronic Systems**, 2nd ed., John Wiley & Sons, New York, 1988, pp. 30–40.

2. Paul, C.R., "On the Superposition of Inductive and Capacitive Coupling in Crosstalk Prediction Models," **IEEE Trans. on Electromagnetic Compatibility**, EMC–24(3), pp 335–343, August 1982.

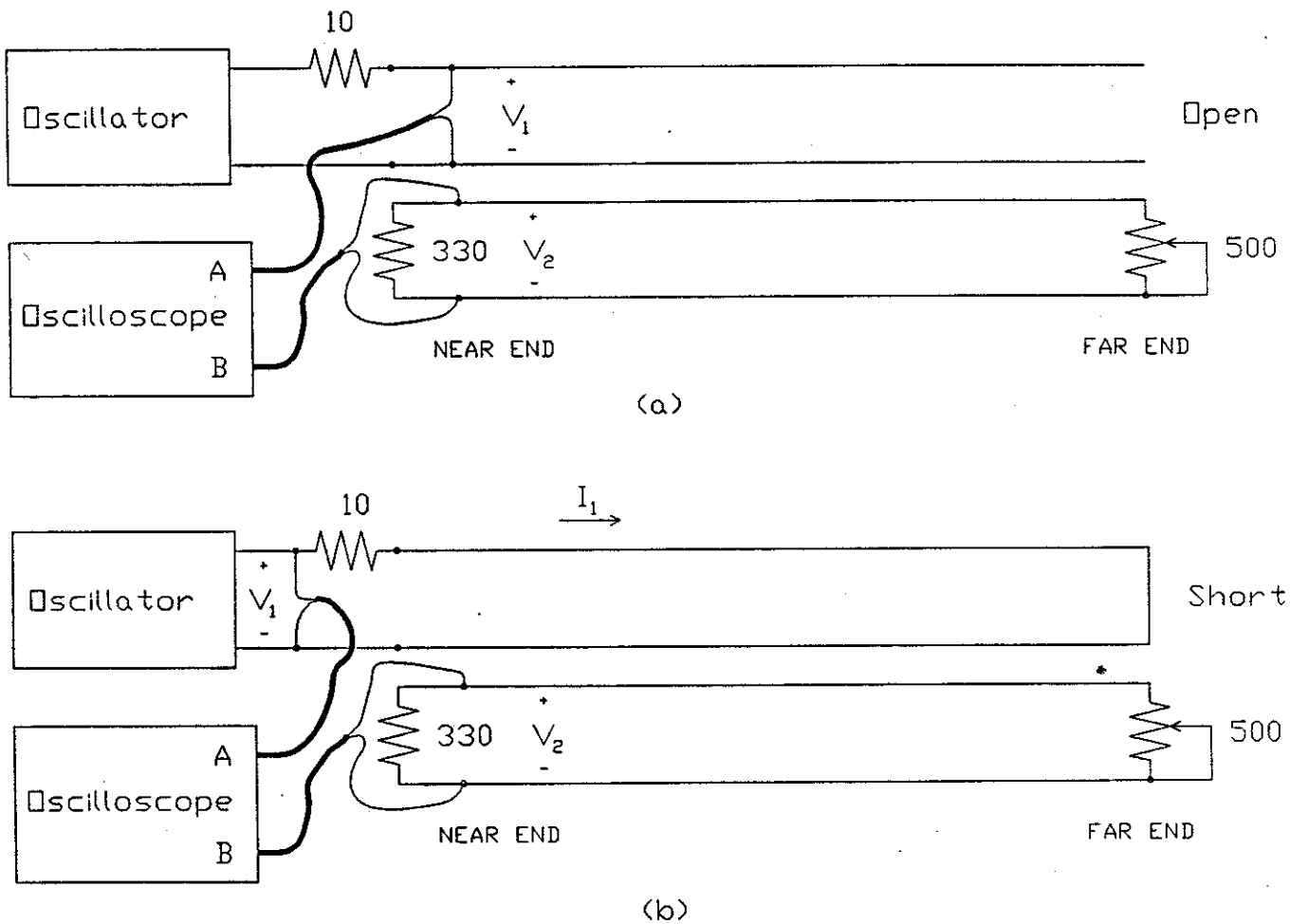

Figure 1. Set–up for coupling experiments. In (a), the first cable is open circuited so that electric–field coupling dominates. In (b), terminating the cable in a short circuit causes magnetic–field coupling to become the dominant mechanism.

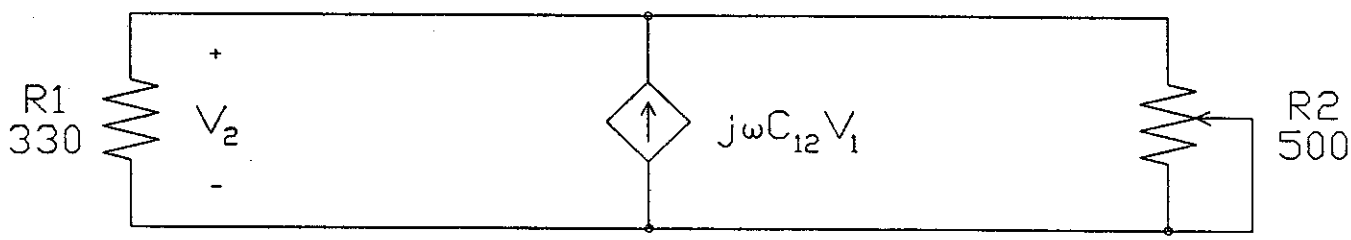

(a) ELECTRIC-FIELD COUPLING

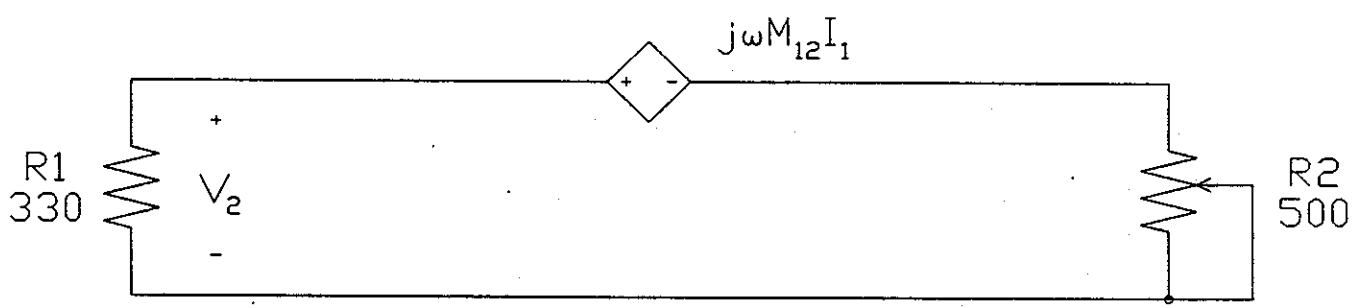

(b) MAGNETIC-FIELD COUPLING

Figure 2. Equivalent circuits for low–frequency coupling into the second cable.

MAGNETIC–FIELD COUPLING OF CURRENT LOOPS

by

Jasper J. Goedbloed
Philips Research Laboratories
Eindhoven, The Netherlands

1. OBJECTIVE

To understand the mechanism of magnetic–field coupling of current loops, which is a prerequisite for correct EMC design of wiring, printed wiring board tracks, multi–wire cables (pin–choice), the use of common–mode chokes, the understanding of the conversion of differential–mode into a common–mode current and vice versa, of a large class of cable transfer impedances, of the unwanted effect of a pigtail when mounting a coaxial cable, and of quasi–active magnetic–field screening.

2. EQUIPMENT

A photograph of a possible experimental setup is given in Fig. 1a while the corresponding basic circuit is shown in Fig. 1b [1]. Some auxiliary pieces are shown in Fig. 2a through 2c and Fig. 5.

A. A sinusoidal oscillator (see Fig. 1), say 100Hz to 10MHz, with 50Ω source impedance and several volts open–circuit voltage, depending on the sensitivity of the current probes. This generator is used to study various effects in the frequency domain.

B. A square–wave (or pulse) generator capable of producing, say, a 10kHz square wave having rise/fall times of, say, 1μs (frequency components up to a few MHz), and an open–circuit voltage of several volts, see under A. This generator is used to study various effects in the time–domain (relevant to digital signals).

C. Dual trace oscilloscope (see Fig. 1). A bandwidth up to 10MHz is normally sufficient.

D. Two current probes (current transformers) being capable of responding in the frequency range a few hundreds of Hz up to 10MHz (see Fig. 1). The main requirement is that the probes are fairly identical in their responses. A flat frequency response is not needed, as current ratios will be considered. A response like that of a first–order high–pass filter, the normal response of a current probe (or current transformer), is quite acceptable. The sensitivity of the probes depends on the voltage of the generators and the sensitivity of the dual trace oscilloscope. Home–made current transformers such as are described at the end of this experiment may also fit the purpose (see section 5 and Fig. 7).

E. 1. One 50Ω load resistor (see Figs. 1, 2a and 3).

2. Two 50Ω feed–through resistors might be needed to have a low–ohmic loading of the current probes to be connected to the dual trace oscilloscope (which normally has a high–impedance input). The current probe may show a resonance type response when it is loaded with a high impedance. As mentioned, a flat response characteristic is not needed, but a marked resonant–like response makes it difficult to understand the results directly.

F. 1. Two BNC/BNC (female/female) connectors (see Fig. 2b), of which the outer conductors are interconnected with a 10cm long, say 3mm thick, wire forming the short reference conductor AB, which is also indicated in Fig. 1b. For example, a piece of 'green/yellow' wire will do. The wire need not be insulated as it is a part of the reference (ground) of the setup. The 10cm is not very critical. However, if the setup is used to determine cable parameters quantitatively, the length should be very much smaller than the length of the investigated cable. Moreover, as will be explained in Section 4.2, the resistive part of the short reference conductor should be small compared to the resistive part of the reference wire of the wire pair under investigation. The 3mm is not critical: a thick wire creates a rigid construction. However, if this wire is too thick, it might not be

possible to clip–on the current probe which measures the current I_r in Fig. 1b. See also Fig. 3.

2. Two BNC(male)/Banana(female) pieces, interconnected by short wires to form the auxiliary piece, a copy of which is shown in Fig. 2c. This piece enables us to measure the current I_2 in the reference (ground) conductor of the wire pair under investigation, or the current I_1 through the 50Ω load resistor (see also Fig. 1b).

3. One Banana(male)/BNC(female) piece. This piece will be used together with a BNC(female)/Banana(female) piece to simulate the unwanted effect of a pigtail formed when mounting a coaxial cable. See Fig. 5.

4. For convenience: BNC connectors (male) to connect the wire pairs to be studied to the auxiliary piece (Fig. 3).

G. Wire pairs of length about 1 metre:

1. Standard appliance cord
2. RG–58 coaxial cable
3. Two loose wires taken from a standard appliance cord

The wire pairs mentioned form a kind of minimum to illustrate the various phenomena. However, any additional wire pair may be of interest. For example, a wire pair in a flat cable, a wire pair in a multi–wire computer cable, a double–braided coaxial cable, mu–metal coaxial cable, etc. In fact, every wire pair of which the parameters are needed in EMI prediction calculations.

H. A ferrite ring or a U–shaped ferrite plus an I–shaped ferrite to close the magnetic path. This material is only needed if one wants to demonstrate the useful effect of common–mode chokes.

3.PROCEDURE

3.1 General

Construct the basic measuring setup as depicted in Fig. 1 using the sinusoidal oscillator in the case of Demonstrations 1 to 5 (measurements in the frequency domain), or the square–wave generator in the case of Demonstration 6 generator (measurements in the time domain). To avoid unwanted coupling effects, the auxiliary pieces, the wire pair under investigation and the current probes have to be placed on a non–metallic table.

In all demonstration experiments the behaviour of two coupled current loops is considered. One loop is formed by the signal generator, the signal wire of the wire–pair under investigation, the load resistance and the short reference conductor. The other loop is formed by the reference wire of the wire pair under investigation and the short reference conductor. An important EMC parameter then is the magnetic field coupling coefficient, k, between these two loops, see Section 4.4. By replacing the oscilloscope with (selective) voltmeters, the measuremenst can be carried out more accurately and k can be determined accurately from the measurement data.

The various steps in the demonstrations have been numbered 1 through 20. The order of the demonstrations is free but the order given below is much valued by the students. Several results of the experiments will be shortly discussed in Section 4.3.

3.2 Demonstrations

1. Start with the standard appliance cord as the 'wire pair under investigation', see Fig. 3. (In Fig. 1a the wire pair under investigation is a pair separated from a flat cable.)

2. Choose the sensitivity of the input channels of the dual trace oscilloscope to which the current probes are connected such that equal currents have equal magnitudes on the oscilloscope screen. (So in the case of identical current probes, equal sensitivity of the input channels is chosen.)

3. Adjust the oscillator to a frequency of about 5kHz. Generally, both currents have different amplitudes when doing so. Next, adjust the output voltage of the oscillator and

the sensitivity of the oscilloscope to such a value that the larger of the two traces on the screen is well readable (say, 4cm high), keeping in mind the condition mentioned under step 2.

Now the preparations are complete and the demonstrations can be started.

3.2.1 Demonstration 1

4. Tune the oscillator through the frequency range, say from 100Hz to 10MHz.
5. Adjust the frequency to such a value that $I_r=I_2$ and record the frequency $f=f_{ac}$ where the subscript *ac* denotes: *appliance cord.*
6. Increase the frequency up to values $f>>f_{ac}$ until the ratio $r=I_r/I_2$ reaches an asymptotic value r_{ac}, and record r_{ac}.

Note: If f is increased too much, resonant phenomena may occur if the wavelength of the signal no longer is large compared to the dimensions of the circuit. This aspect is not covered by the demonstration mentioned, but it can, of course, be studied in supplementary demonstrations.

Now we should have been able to make two important observations:

a. At low frequencies most of the current takes the 'short–cut', i.e., the short reference conductor AB since in that frequency range, $I_r>I_2$ whereas at high frequencies most of the current takes the path of the long reference wire (the 100cm in the appliance cord) since in that range $I_2>I_r$.

b. At high frequencies, most **but not all** of the current takes the longer route.

3.2.2 Demonstration 2

7. Replace the standard appliance cord by the RG–58 coaxial cable so that this cable becomes the wire pair under investigation. Repeat steps 4 through 6, and record the equal current frequency f_{cc} and the high–frequency asymptotic ratio $r_{cc}=I_r/I_2$ where the subscript *cc* denotes: coaxial cable.

Now we should have been able to make three important observations:

a. The phenomena observed in the first demonstration are not limited to an appliance cord.

b. f_{cc} is smaller than f_{ac}.

c. r_{cc} is (much) smaller than r_{ac}. Obviously, in the case of a coaxial cable and at high frequencies a larger part of the current takes the long reference route than in the case of a standard appliance cord.

3.2.3 Demonstration 3

8. Replace the coaxial cable by the two loose wires placed as well as possible on top of each other and repeat steps 4 and 6, where the latter step yields $r_{lw}=I_r/I_2$, where the subscript *lw* denotes: loose wires.
9. Take the upper one of the two loose wires and remove it from the lower one (increase the distance between the two wires) and bring it back to the original position. Repeat this action a few times, so that the students see 'what happens to the oscilloscope screen'.
10. Twist the two wires, repeat steps 4 and 6, and record $r_{lwt}=I_r/I_2$, where the subscript *lwt* denotes: loose wires twisted.

Now we should have been able to make three important observations:

a. The ratio r_{lw} changes with the distance between the two wires.

b. When the distance is increased the current through the short reference wire increases with respect to the current through the long reference route.

c. It is difficult to position the two wires on top of each other such that a (relatively) low value of r_{lw} is obtained and the (relatively) low value is readily obtained when twisting the wires as this twisting brings the wires as close as possible to the optimal relative position.

3.2.4 Demonstration 4

11. Replace the coaxial cable with the appliance cord and go back to the situation mentioned under step 5, and do not change the settings of the generator and oscilloscope when performing step 12.

12. Wrap both wires in the same direction one or two times around the leg of the U–shaped ferrite and close the magnetic path by means of the I–shaped ferrite (or wind both wires one or two times in the same direction around a ferrite ring) and observe the change in the ratio of both currents measured.

13. Repeat steps 5 and 6 and record the equal current frequency $f=f_{acf}$ and the high–frequency asymptotic ratio $r_{acf}=I_r/I_2$, where the subscript *acf* denotes: appliance cord plus ferrite.

Now we should have been able to make two important observations:

a. After step 12: the current through the short reference wire has decreased 'dramatically' with respect to the current through the long reference route.

b. After step 13: $f_{acf}<<f_{ac}$, and $r_{acf}<<r_{ac}$.

3.2.5 Demonstration 5

14. Install the coaxial cable again and choose a frequency $f>>f_{cc}$ such that I_r has its (very) low value, and keep the generator voltage setting fixed in the next steps. Record $I_r=I_{r1}$ and record I_1 through the 50Ω load. The latter current will not change when performing steps 15 and 16. Calculate and record the asymptotic ratio $\rho_1=I_{r1}/I_1$.

15. Remove the auxiliary piece shown in Fig. 2c (including the connected current probe), so that the cable is directly plugged into the the auxiliary piece shown in Fig. 2b and the only current probe used is the one measuring I_r, see Fig. 4. Record the asymptotic current ratio $\rho_2=I_{r2}/I_1$.

16. Insert the BNC–Banana and Banana–BNC parts (the pigtail simulator) as shown in Fig. 5 and record the asymptotic current ratio $\rho_3=I_{r3}/I_1$.

Now we should have been able to make two important observations:

a. The current I_{r2} in situation 15 is lower than I_{r1} in situation 14, so $\rho_2<\rho_1$.

b. The current I_{r3} in situation 16 is larger than I_{r2} in situation 15, so $\rho_3>\rho_2$.

3.2.6 Demonstration 6

17. Replace the sinusoidal oscillator by the square–wave generator, adjusted to a frequency of about 10kHz.

18. Use the appliance cord as the wire pair under investigation and observe the waveforms of the two currents.

19.Replace the appliance cord by the coaxial cable and observe the waveforms of the two currents.

Now we should have been able to make two important observations:

a. The low–frequency components of the spectrum of the square wave signal take the short reference route, the high–frequency components the long reference route.

b. In the case of the appliance cord, the current through the short reference route contains a wider range of low–frequency components than it does in the case of the coaxial cable.

20.If an oscilloscope is available having a feature that both signals of the current probe can be added, it is instructive to use this feature in Demonstration 6. When the polarities of the signals are chosen correctly, both signals will add to a square wave signal equal to that produced by the current I_1 through the 50Ω load resistance.

3.2.7 Additional Demonstrations

The 6 demonstrations described above form a kind of minimum to observe the relevant phenomena. Of course, the behaviour of all kinds of wire pairs, with or without ferrite chokes, with or without pigtails of various dimensions, can be demonstrated using either the sinewave generator or the square wave generator.

4. THEORY

4.1 General

Consider Fig. 6 showing

a. the basic circuit considered in the demonstration experiments,

b. the associated circuit needed to calculate various effects properly, and

c. a basic circuit of two electrically separated circuits which will be similar to the circuit given in Fig. 6 when connecting A with E and D with H.

To understand the fundamental phenomena we may have a look at Fig. 6c first. Here we have a first current loop CL1: ABCDA in which the current I_1 flows. Within this loop we bring a closed second loop CL2: EFGHE. The field produced by I_1 in CL1 induces a current I_2 in CL2, where the level of I_2 is proportional to the mutual inductance between the two loops. In the case of an ideal coupling between CL1 and CL2, we find for the amplitudes $I_2=I_1$, and in the case of non–ideal coupling we have $I_2<I_1$. Furthermore, the current I_2 is opposite in direction to the current I_1 (Lenz's law).

We now go to Fig. 6a, where we identify the loop ABCDA as the first current loop CL1 and the loop DGFAD as the second current loop CL2. Of course, the induction effects in the circuits of Fig. 6c and Fig. 6a are the same, while in the circuit of Fig. 6a the current $I_r=I_1-I_2$. Hence, the better the coupling between CL1 and CL2, the more we reach the situation where $I_2$and I_1 have equal amplitudes, but still opposite directions, and I_r approaches zero. So when measuring I_2 and I_r separately, as was done in the demonstration experiments it only looks as if the current I_1 chooses at D the long route DGFA instead of the short route DA. In reality, we still have two currents (I_1 and I_2) flowing in opposite directions. Therefore, I_r/I_2 is a measure of the mutual inductance, M, between the two loops, or, using a dimensionless quantity, is a measure of the coupling coefficient, k, between the two loops.

The ratio I_2/I_1 is in practice such that the total flux produced by the coupled loops has a minimum value. This effect is known as the 'minimum flux principle'. As a consequence of this principle we have the following: If we have an original current loop (CL1 with a driving source) and there exist one or more current loops parallel to CL1, the magnetic field coupling causes a current distribution through these loops such that the flux of the total system of loops has its minimum value. With regard to EMC this means that if the loop CL2 is **not** designed on purpose, and parallel loops of other circuits are present, a part of I_1 might flow through these parallel loops which may cause interference. However, if CL2 is designed on purpose and correctly (i.e., a large value of the mutual inductance between CL1 and CL2 and a low value of the common impedance of both loops) most of the current effectively flows in the loop ABCDGFA and not in the other loops. In the case that the generator and load are connected by a cable, the correct choice of the k–coefficient of the cable is of importance, as well as the k–coefficient of the remaining parts of the circuit (see Section 4.3).

In the case that the generator and load are on a printed wiring board, the loop CL2 may be designed as one single loop closely to the loop CL1, or CL2 may be presented by a metal plane (or a wire mesh) at the backside of the board. The current I_1 will then induce a current I_2 in this plane or mesh, while the minimum–flux principle provides that the current path of I_2 is 'as good as possible' below (close to) that of I_1.

Because I_1 and I_2 have opposite directions, the associated magnetic fields have opposite directions. Since CL1 and CL2 are located in almost the same position, the total field at some distance of the two loops is clearly lower than that of the original loop CL1. In other words, the magnetic flux produced by the coupled loops CL1 and CL2 is smaller than that of CL1. Conversely, the signal induced by an external field in the wanted circuit loop ABCDGFA is smaller than that induced in the original loop ABCDA, see Section 4.4. The latter is true because the reciprocity theorem is applicable.

(More precisely, CL1 and CL2 have opposite magnetic dipole moments m_1 and m_2 with $|m_2| \leq |m_1|$. By considering the dipole moment, it is clear that the product of current and loop area is important, as well as the relative orientation of the two loops.)

Note that CL2 does not contain a source, hence it can only produce a flux by means of the curent induced by CL1. The reduction of the flux produced by the total circuit can be called 'quasi–active screening (shielding)'. In the case of active screening, CL2 would contain a generator needed to reduce effectively the field produced by CL1. The mechanism of quasi–active screening is also effective when considering the source induced in the wanted circuit by an external field.

So far the general theory, which is very important in EMC matters, has been discussed. In Section 4.2 we present a quantitative discussion of the coupling mechanism, and the importance of the coupling coefficient will be explained. In Section 4.3 we discuss some of the observations made in the demonstration experiments, also giving us quantitative information about the coupling coefficient. In Section 4.4 some applications of the coupling coefficient will be mentioned.

4.2 Calculations

Consider the circuit as given in Fig. 6a [1], where a generator characterized by $\{U_g, R_g\}$ is connected via a wire–pair {BC,FG} to a load resistance R_L. Between the load resistance and the generator there is the short reference wire AD, characterized by its

resistance R_r.

To calculate the properties of that circuit properly, we must add the field properties to the circuit of Fig. 6a. This is done in Fig. 6b, where L_1 represents the self inductance of the loop ABCDA. So L_1 represents the effect of the magnetic field caused by I_1 on the loop in which I_1 flows. Similarly, the self inductance L_2 represents the magnetic field effects of I_2 in the loop I_2. The mutual inductance between these two loops is indicated by M.

Strictly speaking, the self inductances represent properties which are distributed over the circumference of the loops. However, to understand the present phenomena it is allowed to consider concentrated inductances, in particular because the frequency range considered is limited, so that always the low–frequency approximation (circuit dimensions<<smallest wavelength) is allowed. Moreover, in the demonstration the reference wire AD is very much shorter than the wire pair under test, so that the contribution of the part AD to the loop inductance is neglible compared to that of ABCD or AFGD.

Applying Kirchhoff's law to the loops ABCDA and AFGDA (Fig. 6b) yields the relations

$$(R_g+R_L+R_1+j\omega L_1)I_1-(R_r+j\omega M)I_2=U_g \tag{1a}$$

$$(R_r+j\omega M)I_1-(R_r+R_2+j\omega L_2)=0 \tag{1b}$$

From these relations it can be derived that

$$\frac{I_2}{I_1}=\frac{R_r+j\omega M}{R_r+R_2+j\omega L_2}=\frac{\frac{R_2}{L_2}+j\omega}{\frac{R_r+R_2}{L_2}+j\omega}k \tag{2a}$$

$$\frac{I_r}{I_1}=\frac{R_2+j\omega(L_2-M)}{R_r+R_2+j\omega L_2}=\frac{\frac{R_2}{L_2}+j\omega(1-k)}{\frac{R_r+R_2}{L_2}+j\omega} \tag{2b}$$

$$\frac{I_r}{I_2}=\frac{R_2+j\omega(L_2-M)}{R_r+j\omega M}=\frac{\frac{R_2}{L_2}+j\omega(1-k)}{\frac{R_r}{M}+j\omega}\frac{1}{k} \tag{2c}$$

where $I_r=I_1-I_2$ and k is the effective coupling coefficient defined by

$$k=\frac{M}{L_2} \tag{3}$$

The effective coupling coefficient is comparable to the coupling coefficient between the primary and secondary windings of a transformer.

From Eq.(2) it follows that at high frequencies we find frequency–independent asymptotic values for the three ratios, given by

$$\frac{I_2}{I_1}=k \tag{4a}$$

$$\frac{I_r}{I_1} = 1-k \tag{4b}$$

$$\frac{I_r}{I_2} = \frac{1-k}{k} \tag{4c}$$

Hence, k can easily be determined from the measured ratios. In the case of ideal coupling, $k=1$ and consequently, $I_2=I_1$ and $I_r=0$. Then no effective current is flowing through the short reference conductor. It is this case that has been considered in Reference [2].

In several of the demonstration experiments the ratio $r=I_1/I_2$ is considered. The high–frequency asymptote is then given by Eq.(4c). It follows from Eq.(2c) that the ratio of the currents equals 1 at a frequency $f_1=\omega_1/2\pi$ where ω_1 follows from

$$\omega_1^2 = \frac{R_2^2-R_r^2}{(2k-1)L_2} \tag{5}$$

From this equation it follows that $I_r<I_2$ can only be reached if $R_r<R_2$ and, simultaneously, $k>1/2$. It is left to the student to investigate what happens if these two conditions are not met.

In Demonstration 5 the ratio $\rho=I_r/I_1$ is considered. The high–frequency asymptote of this ratio is given by Eq.(4b).

4.3 Discussion of Some Experimental Results

The various observations made in the Demonstration experiments can be explained by using the model discussed in Section 4.2.

Demonstration 1: Standard appliance cord

For a standard appliance cord, the $I_r=I_2$ frequency, f_{ac}, is normally between 5 and 10kHz, while the coupling factor k_{ac} is about 0.6 to 0.7. The value of k_{ac} is calculated from r_{ac} using Eq.(4c).

Demonstrations 2 and 5: RG–58 coaxial cable

If the values for R_2 and L_2 of the coaxial cable do not differ much from those of the standard appliance cord, f_{cc} is, in general somewhat lower than f_{ac} because the k factor of the coaxial cable is much higher than that of the appliance cord, see Eq.(5). The coupling factor k_{cc} is about 0.996 to 0.998, if (!) the value of ρ_2 recorded in Demonstration 5 is used.

If r_{cc} recorded in Demonstration 2 is used (or ρ_1 recorded in Demonstration 5), a clearly lower value of k_{cc} is found. However, the latter value stems from the combined action of the loop coupling as determined by the cable and by the part determined by the auxiliary piece, which has a very low k value. Here it becomes clear that the inductances (self and mutual) are quantities distributed over the circumference of the current loop. Consequently, when modeling practical current loops not only the cable has to be modeled, but also the mounting (connector, pigtail) and the part of the loop inside the equipment housing. By doing so it is readily demonstrated that, for example, a coaxial cable mounted via a pigtail gives a poor effective k–value. Moreover, also a coaxial cable mounted via a good connector on a plastic equipment housing with inside this housing two separate wires completing the loop, will result in a poor effective k–value. If the housing would have been

of metal, there is the possibility that most of the current I_2 closes the loop over the metal housing and an additional reference wire because that route has a lower impedance. In that case the effective k–value is determined by cable and connectors. (An important aspect of screening is offering a wanted current path.)

The effect of a pigtail becomes clear when comparing ρ_2 and ρ_3 (Demonstration 5) where the pigtail effect is simulated by the auxiliary piece for the current probe.

Demonstration 3: Loose wires

Here the importance of the lay–out of the two coupled current loops is demonstrated. This is of importance, for example, when making the pin–choice in (flat) multi–wire cables. The latter can easily be demonstrated with the present setup, which will show that the optimum k–value is only found for two adjacent wires in the cable. All other combinations will yield lower values.

In Demonstration 3 it is also shown that twisting helps to obtain a relatively low k–value. However, please note that the twisting only helps because it brings the two wires close together.

Demonstration 4: Influence of a common–mode choke

This experiment demonstrates that winding both wires in the same direction around the ferrite material clearly increases the coupling coefficient between the loops and that L_2 increases strongly compared to the situation without the ferrite material. This explains why f_{acf} has such a low value, see also Eq.(5).

Demonstration 6: Time–domain observations

It is expected that the observations made need no further elucidation.

4.3 Some Applications of the Coupling Coefficient k

Here we summarize some useful relations, indicating the importance of the coupling coefficient k, without giving a derivation for all these relations. More information may be found in Reference 1. The relations are valid if the low–frequency approximation is allowed (i.e., dimensions of the circuit small compared to the smallest wavelength of (or in) the signal to be considered).

Common–mode current

The current I_r is equal to the common–mode current I_{cm} in the circuit of Fig. 6. From Eq.(4b) it then follows that

$$I_{cm} = (1-k)I_1 \tag{6}$$

which clearly demonstrates the importance of a high k–value. It also explains why a coaxial cable often improves the EM situation. Not because it is a screened cable (which it is not at all as the outer conductor is one of the signal paths) but because it is a cable with a high k–value.

When we identify I_1 (Fig. 6) as the differential–mode current of the circuit, it will be clear that (1–k) plays an important role in the conversion from common–mode signals into differential–mode signals and vice versa.

Quasi–active screening

It can be shown that the magnitude of the effective dipole moment m_e of the two coupled current loops is given by

$$m_e = (1-k)I_1A_1 \tag{7}$$

if the two loops are located in the same plane, and A_1 is the area of the loop ABCDA. This again shows the importance of k, when reducing the radiation from a circuit.

Where it concerns induction by an external field, it can be shown that the induced source U_i in the wanted circuit loop ABCDGFA (Fig. 6) amounts to

$$U_i = (1-k)U_1 \tag{8}$$

where U_1 is the induced source in loop ABCDA in absence of the loop AFGDA.

Cable transfer impedance

For the class of cables of which the global transfer impedance $Z_{Tg}(\Omega)$, can be modeled by a resistor in series with an inductance, it can be shown that

$$Z_{Tg} = R_2+(1-k)L_2 \tag{9}$$

where the parameters R_2 and L_2 are as in Fig. 6. If the low–frequency approximation is allowed, the local transfer impedance expressed in Ω/m, follows Z_{Tg}/l where l is the length of the cable.

In practise the total transfer impedance Z_{Tt} of the complete circuit to circuit connection is of importance, that of the cable plus the contribution of the connector or the pigtail, plus the contribution of the connection between connector and circuit. All these additional contributions can be written in the form of Eq.(9).

5. Do–It–Yourself Current Probe (see Fig. 7)

A current probe which fits the purpose of the present experiment can easily be made from a ferrite core around which a coil (N turns) is wound, shunted by a resistor of R Ω. If R is much smaller than the input impedance of the oscilloscope, the insertion loss caused by the current probe in the circuit in which the current to be measured flows (the current I in the wire W in Fig. 7) is to a first order approximation equal to R/N^2 Ω.

Take, for example, a ferrite core with an inner diameter of 9 mm, outer diameter of 14 mm, thickness 5 mm, and an inductance factor of $A_L \simeq 2$ μH. Wind a coil with N=33 turns around the core and take R= 1 Ω. Then a response of about 25 mV/A (in the ideal case 1/33 V/A) is found over almost the whole range of frequencies of interest in the present experiment, as the inductance of the coil is about 2 mH (N^2A_L) so that $\omega N^2 A_L$=R at a frequency of 80 Hz. The insertion impedance in the circuit with wire W is then about 1 mΩ (1/33 Ω). This impedance should be small compared to the impedances in the circuit.

The needed current probe parameters depend on the minimum sensitivity of the oscilloscope used and the maximum current that can be delivered by the generators to be used in the experiment.

6. REFERENCES

1. J.J. Goedbloed, **Electromagnetic Compatibility**, Kluwer, Deventer, The Netherlands, 2nd Ed. 1991 (in Dutch), to be published in English by Prentice Hall (1992).

2. H.W. Ott, **Noise Reduction Techniques in Electronic Systems**, John Wiley Interscience, New York, 2nd Ed. 1988.

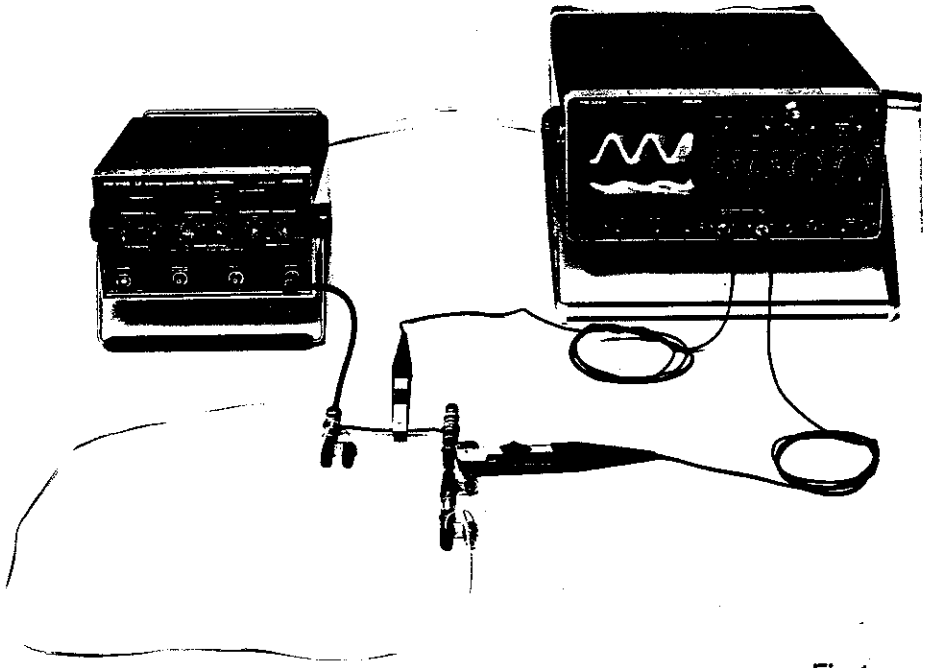

Fig.1a

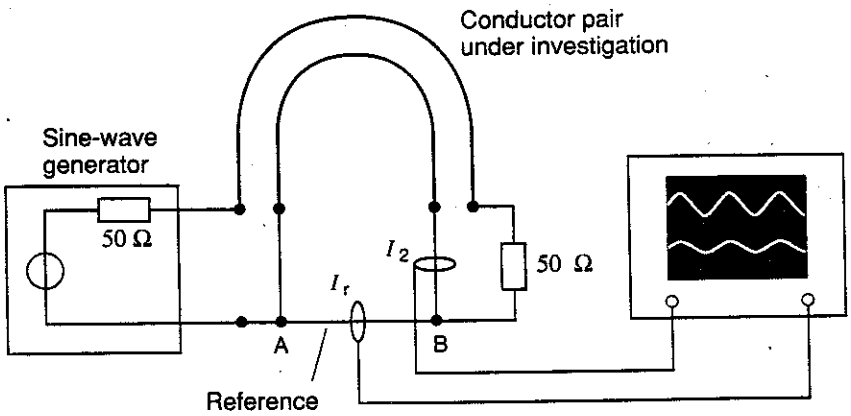
Conductor pair
under investigation
Sine-wave
generator
50 Ω
I_2
I_r
50 Ω
A
B
Reference

Fig.1b

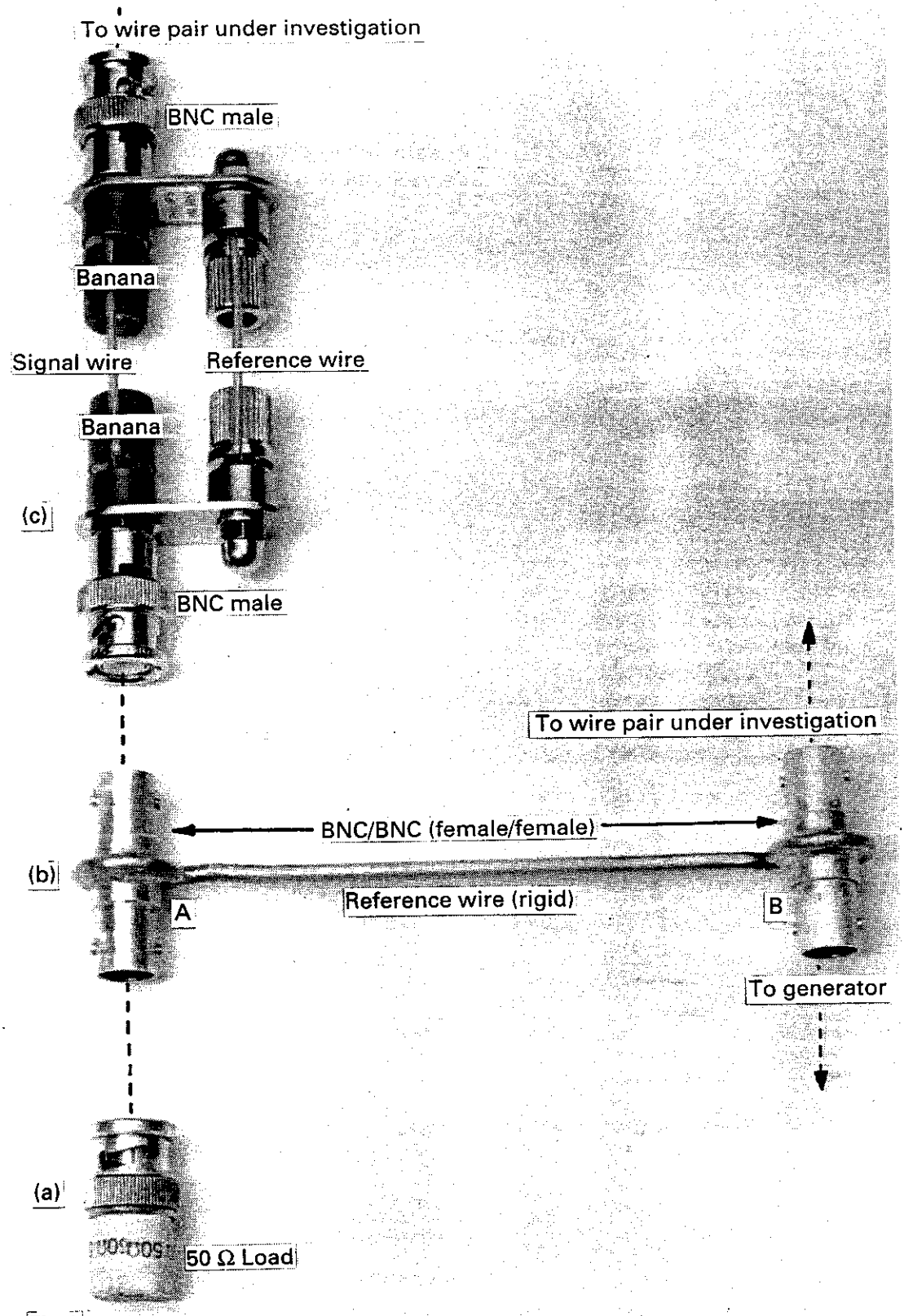
To wire pair under investigation
BNC male
Banana
Signal wire
Reference wire
Banana
(c)
BNC male
To wire pair under investigation
BNC/BNC (female/female)
(b)
A
Reference wire (rigid)
B
To generator
(a)
50 Ω Load

Fig.2

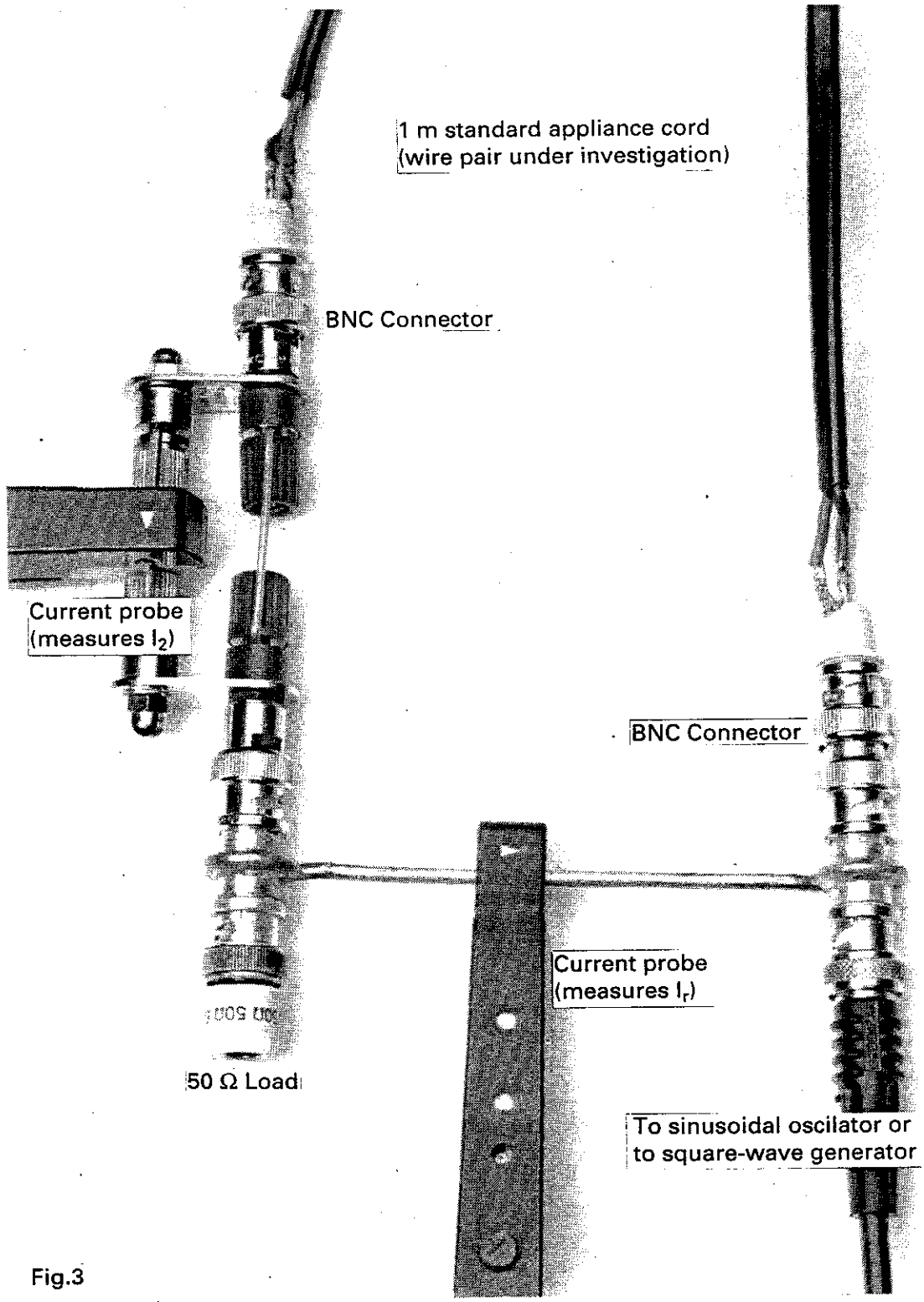
1 m standard appliance cord
(wire pair under investigation)
BNC Connector
Current probe
(measures I_2)
BNC Connector
Current probe
(measures I_r)
50 Ω Load
To sinusoidal oscilator or
to square-wave generator

Fig.3

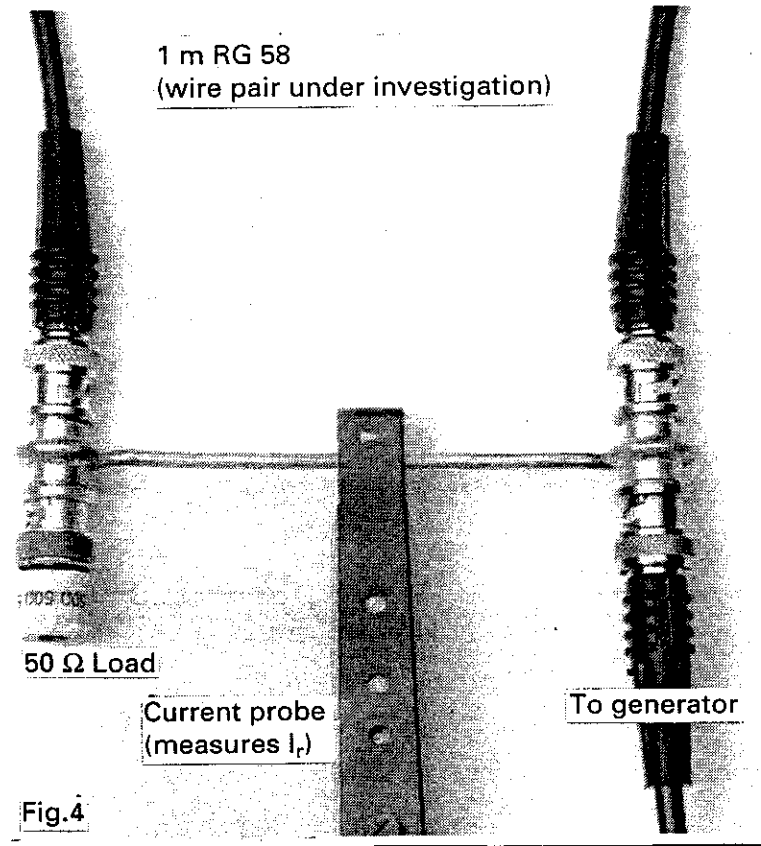
1 m RG 58
(wire pair under investigation)
50 Ω Load
Current probe
(measures I_r)
To generator

Fig.4

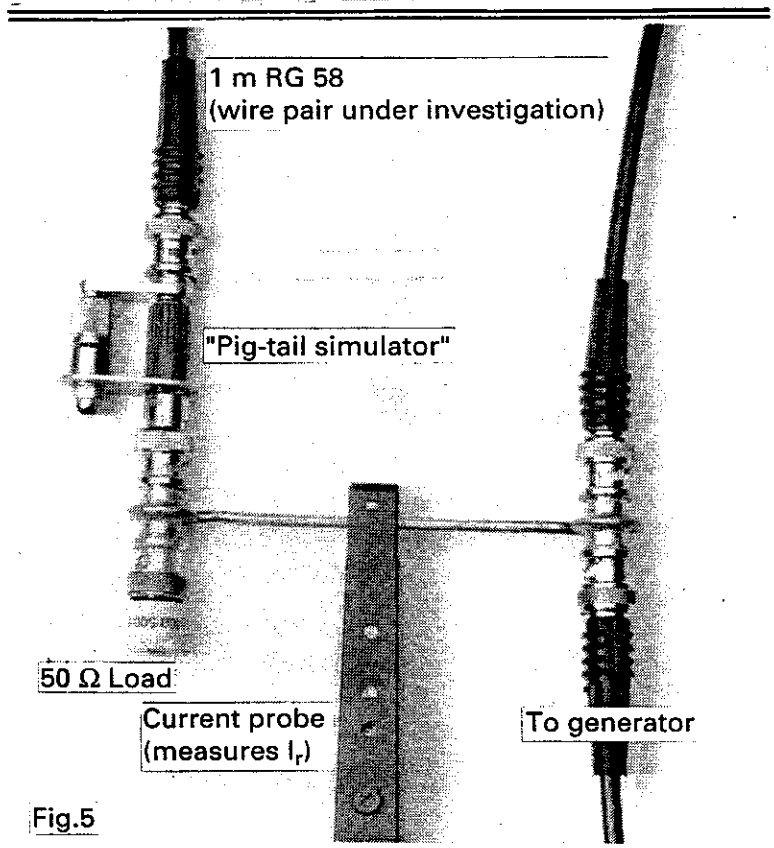
1 m RG 58
(wire pair under investigation)
"Pig-tail simulator"
50 Ω Load
Current probe
(measures I_r)
To generator

Fig.5

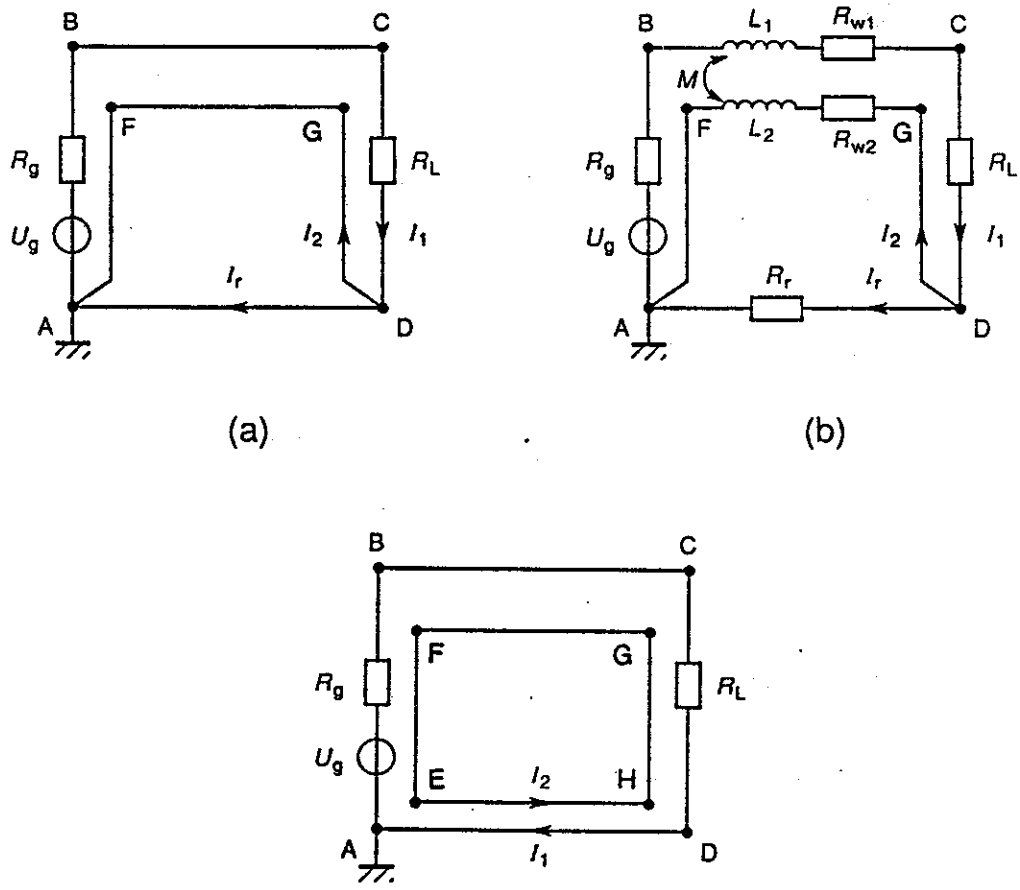
B
C
F
G
R_g
R_L
U_g
I_2
I_1
I_r
A
D
(a)
B
L_1
R_{w1}
C
M
F
L_2
R_{w2}
G
R_g
R_L
U_g
I_2
I_1
R_r
I_r
A
D
(b)
B
C
F
G
R_g
R_L
U_g
E
I_2
H
A
I_1
D
(c)

Fig.6

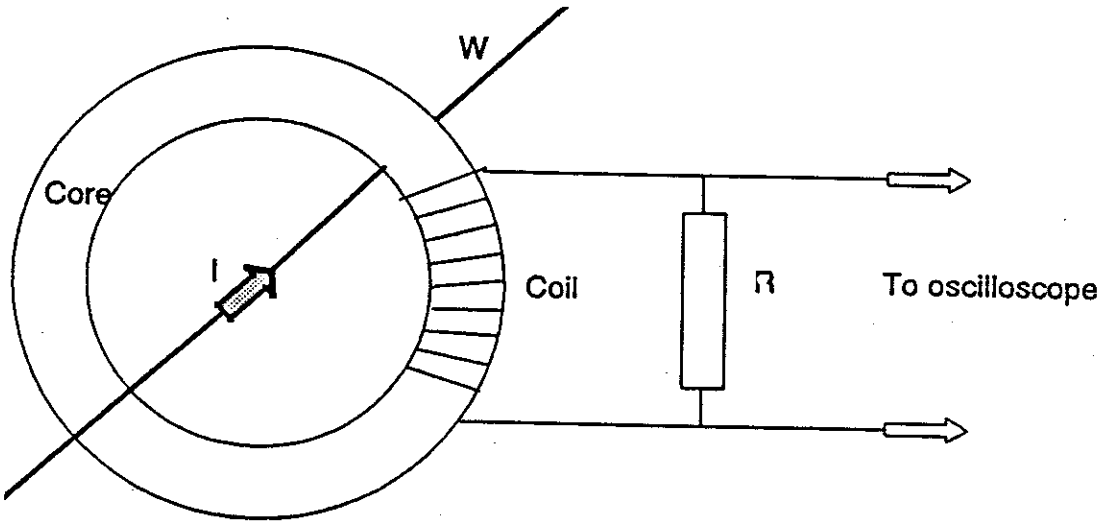

Fig.7

EFFECT OF PULSE RISE/FALL TIME ON SIGNAL SPECTRA

by

Clayton R. Paul
Department of Electrical Engineering
University of Kentucky

1. OBJECTIVE

To investigate the effect of pulse rise/fall times on the frequency (spectral) content of typical periodic clock signals. To show that pulses having short rise/fall times have frequency spectral content that extends to higher frequencies than do pulses having longer rise/fall times. To investigate the effect of lead inductance on the performance of circuit elements such as capacitors.

2. EQUIPMENT

A. Oscilloscope (with 100MHz bandwidth) and a 50Ω plugin.
B. Spectrum Analyzer capable of sweeping to 100MHz.
C. DIP oscillator capable of producing a trapezoidal pulse train having a repetition rate of a few MHz. A suggested type is a Dale XO–338 4MHz oscillator fitting a 14–pin socket. Note: Pin 14 is for +5V DC, pin 7 is ground and the output is between pin 8 and pin 7. Pin 1 is unused.
D. A length of 50Ω coaxial cable. A 2–foot length is sufficient.
E. Two female banana plug panel mounts.
F. One 18–pin DIP socket for the oscillator.
G. One piece of "perf board" with holes on 100mil centers for mounting the components. A dimension of 5cm×5cm is sufficient.
H. One DC power supply capable of producing 5V.
I. Two 500pF ceramic capacitors.
J. One female BNC panel mount connector.

3. PROCEDURE

3.1 Construction of device

1. Mount the BNC panel mount connector, the two banana panel mount plugs, and the 18–pin DIP socket on the "perf–board" as shown in Figure 1. Keep all components close together.

2. Solder a connection wire between the +5 banana plug and pin 18 of the DIP socket. Solder a connection wire between the ground banana plug and pin 7 of the DIP socket. Solder a connection wire between pins 7,8,9 of the DIP socket and the ground of the BNC panel mount connector. Solder a connection wire between pins 10,11,12 of the DIP socket and the center pin of the BNC panel mount connector.

3. Insert the oscillator in the first 14 pins of the DIP socket. Pin 1 of the oscillator should go in pin 1 of the socket, pin 7 of the oscillator should go in pin 7 of the socket, pin 8 of the oscillator should go in pin 12 of the socket, and pin 14 of the oscillator should go in pin 18 of the socket. Pins 8,9,10,11 will be used to place the capacitors in parallel with the oscillator output (and the 50Ω input resistance of the oscilloscope/spectrum analyzer.

3.2 Effect of rise/fall time on spectral content

1. Attach the 5V DC power supply to the banana plugs of the device. Connect the output of the device to the 50Ω plugin input of the oscilloscope with the coaxial cable. Measure the peak level of the pulse waveform (should be about 1V). Measure the rise/fall

times of the pulse (10%–90%). These should be about 10ns.

2. Connect the output of the device to the spectrum analyzer which is sweeping to 100MHz. Insure that enough attenuation is selected for the spectrum analyzer so as not to overload it (normally 30dB is sufficient). Measure the levels of several harmonics. If a 4MHz oscillator is used, measure the levels of the 11th (44MHz), 17th (68MHz), and 19th (76MHz) harmonics. (Typical levels are 92dBμV, 84dBμV, 80dBμV.)

3. Repeat steps 1 and 2 with a 500pF capacitor inserted into pins 9 and 10 of the socket. This places the capacitor in parallel with the 50Ω of the input to the oscilloscope/spectrum analyzer and so rolls off the frequency response of the load impedance for the oscillator. Cut the lead lengths to as short as possible. (Typical rise/fall times are 40ns and 25ns. Typical measured levels are 74dBμV, 56dBμV and 44dBμV.)

4. Repeat steps 1 and 2 with a 500pF capacitor having lead lengths of 1/2 inch inserted into pins 9 and 10 of the socket. This illustrates the effect of lead inductance. (Typical rise/fall times are 40ns and 25ns. Typical levels are 66dBμV,62dBμV and 63dBμV.) Observe that the longer leads of the capacitor cause the spectral content to increase over that with short leads.

5. Repeat steps 1 and 2 with the short–lead–length capacitor in pins 9 and 10 and the long–lead–length capacitor in pins 8 and 11. This gives (ideally) 1000pF across the oscillator output and further reduces the rise/fall times and spectral content. (Typical rise/fall times are 80ns and 20ns. Typical measured levels are 68dBμV, 60dBμV and 44dBμV. Observe that even though the rise time is significantly reduced, the fall time is not substantially reduced. Also the high–frequency spectral content (above 50MHz) is still quite large.)

4. THEORY

1. Consider the trapezoidal pulse train shown in Figure 2(a). The pulse width, τ, is between the 50% levels of the pulse. The pulse rise time is denoted by τ_r and the fall time is denoted by τ_f. This waveform is representative of typical clock (and to some degree, data) signals in digital products. Since it is a periodic waveform with period T and repetition frequency $f_0=1/T$, it can be expanded in a Fourier series [1,2]. The series consists of sinusoidal components at multiples (harmonics) of the base frequency, f_0. The amplitudes of these components can be obtained [1]. However, unless the rise and fall times are equal, $\tau_r=\tau_f$, the result is complicated. If we assume $\tau_r=\tau_f$ a simple result for the amplitudes of the spectral components is obtained [1]:

$$|c_n| = 2A\frac{\tau}{T}\left|\frac{\sin(n\pi\tau/T)}{(n\pi\tau/T)}\right|\left|\frac{\sin(n\pi\tau_r/T)}{(n\pi\tau_r/T)}\right|_{\tau_r=\tau_f} \qquad (1)$$

This result can be bounded as shown in Figure 2(b) [1]. The bounds on an asymptotic or Bode plot consist of a 0dB/decade part extending to $1/\pi\tau$, a –20dB/decade part extending to $1/\pi\tau_r$ and a –40dB/decade part after that. Observe that the high–frequency spectral content is primarily governed by the second break point, $1/\pi\tau_r$. So increasing the pulse rise (and fall) times (making them longer) moves this second break point down in frequency and causes more of the high–frequency spectral components to roll off at –40dB/decade rather than –20dB/decade. Reducing the high–frequency spectral content of a signal is an important and effective way of reducing the potential EMC problems caused by this signal.

2. One way of "rolling off" the pulse rise/fall times is to place a capacitor in parallel with the signal output. In the above experiment, the 500pF capacitor is placed across and

in parallel with the 50Ω of the oscilloscope/spectrum analyzer. This causes the high–frequency impedance seen by the oscillator to be reduced above the time constant,

$$f_{3dB} = \frac{1}{2\pi RC} \tag{2}$$

For R=50Ω and C=500pF this occurs at 6.37MHz. Therefore placing the 500pF capacitor across the oscillator output should reduce the high–frequency spectrum of the signal.

3. Long leads of components introduce an inductance that is in series with the element, L_{lead} [1]. For a capacitor this causes a resonance at

$$f = \frac{1}{2\pi\sqrt{L_{lead}C}} \tag{3}$$

above which the capacitor with long leads behaves as an inductor. For lead lengths of 1/2 inch the inductance is approximately L_{lead}=14nH [1]. This gives a resonant frequency of 60MHz. Consequently, above this frequency, the capacitor behaves as an inductor and does not "short out" the 50Ω impedance. This effect and the resonance frequency of around 60MHz should be evident in the above spectrum analyzer plots.

5. REFERENCES

1. C.R. Paul, **Introduction to Electromagnetic Compatibility**, John Wiley & Sons, NY, 1992.

2. H.W. Ott, **Noise Reduction Techniques in Electronic Systems**, John Wiley & Sons, NY, 2nd Edition, 1988.

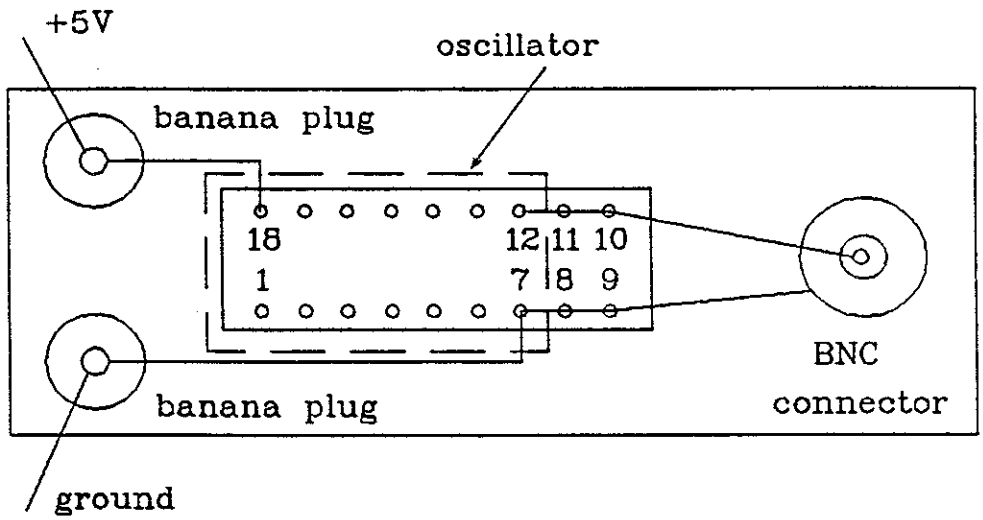

Fig.1. The experimental device.

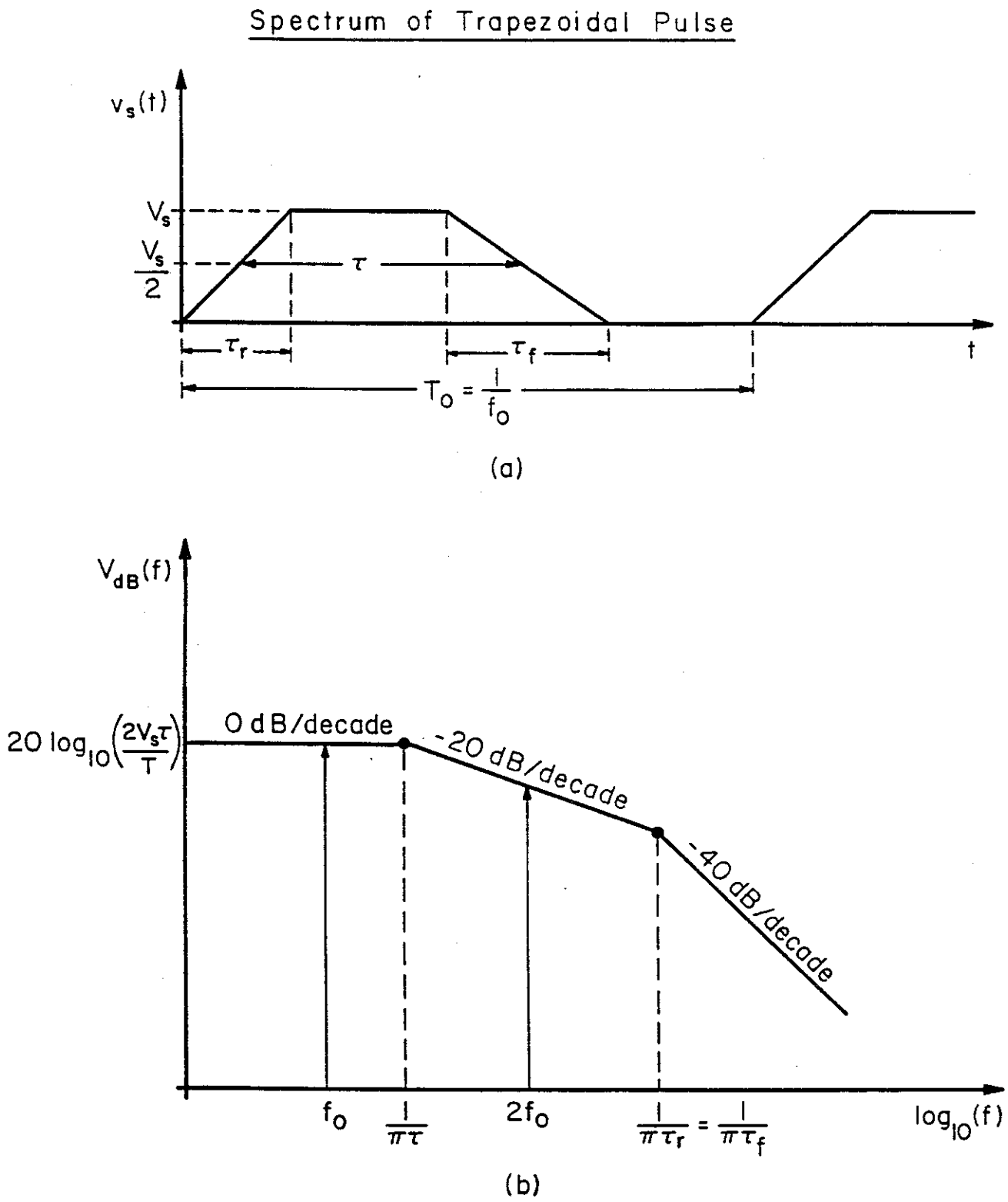

Figure 2. A trapezoidal pulse train representing clock signals. (a) The time–domain signal, (b) the frequency–domain spectrum.

ELECTROMAGNETIC LEAKAGE THROUGH SEAMS

by

Richard J. Mohr
R.J. Mohr Associates, Inc.

1. OBJECTIVE

To show a means of measuring leakage of electromagnetic energy through the seams of an enclosure to characterize the effects of various seam treatments.

2. EQUIPMENT

A. Shielded enclosure with removable cover, preferably with at least 8 threaded fasteners.

B. Coaxial panel jacks with extended center conductor– Qty., 2.

C. Spring contact.

D. Signal generator operable to at least 1MHz. The generator should preferably have a low output impedance (50Ω) and be capable of delivering at least 1V to a matched load.

E. Receiver or spectrum analyzer tunable to the frequencyof the signal generator. The generator should preferably have a sensitivity of 1μV (–107dBm for a 50Ω receiver), or better.

3. PROCEDURE

3.1 Preparation of Test Sample

1. Secure one (1) coaxial panel jack (Item B) to the test enclosure (Item A) as indicated in Figure 1(a).
2. Solder spring contact to center conductor of connector so it will contact the cover when the cover is fastened to the enclosure as indicated in Figure 1(a).
3. Prepare the second coaxial panel jack (Item B) to function as a voltage probe. This will require providing an extension from the connector shell to function as a ground reference connection. With a flanged connector, this may be achieved by securing a threaded fastener to the flange as shown in Figure 1(b).
4. Secure cover to enclosure.
5. With a grease pencil, number sequentially each fastener position and location between fasteners around the periphery of the cover.

3.2 Measurements

1. Set the signal generator (Item D) to the first test frequency, say 1MHz; record on data sheet.
2. Set output level of the generator to a convenient level, say 1V into 50Ω.
3. Connect the generator to the connector on the test enclosure.
4. Connect the receiver (Item E) to the voltage probe prepared in para. 3.1, Step 3.
5. Tune the receiver to the frequency of the signal generator.
6. Place the voltage probe so as to measure the potential difference between the cover and the enclosure at Test Position 1. Note, the center conductor of the coaxial connector contacts the cover while the reference probe contacts the enclosure.
7. Record the measured voltage and probe position on the data sheet.
8. Repeat Steps 6 and 7 at each numbered measurement position.
9. Repeat Steps 2–8 at other frequencies, say 3MHz and 10MHz.
10. Vary the seam treatment and repeat Steps 1–9. Typical variations may include:
    - different securing torque on the fasteners
    - reduced number of fasteners
    - buffed seam interface (with steel wool or fine emery cloth)

– use of conductive gaskets.

3.3 Data Analysis

Plot the measured voltage vs. probe position as in Figure 2. The lower voltages indicate a better EMI seam. Note the variation of voltage vs. measurement position, frequency, number of fasteners, fastening torque, etc.

4. THEORY

Electromagnetic leakage via seams in shielded enclosures occurs primarily as a result of currents which cross the seam. Such crossings cause a voltage to appear on the far side of the seam; electromagnetic leakage via the seam is directly proportional to this (transfer) voltage. In shielding theory the seam is characterized in terms of its transfer impedance as follows:

$$K = \frac{V}{J} \tag{1}$$

where,

K = Transfer Impedance of seam (Ohm–meters)
V = Transfer Voltage
J = Density of current which crosses the seam (A/m)

Seam transfer impedance is conventionally expressed in the dimensions of microohm–meters and typically ranges in value from 1 to 3000 microohm–meters. The lower values are achieved in seams which employ wide–area metal–to–metal contact with close fastener spacings and/or with the use of effective EMI gaskets.

The data (and plots prepared per para. 3.3) will show that the transfer voltage is not constant around the cover. This is partly because the exciting current density is not uniform (less at the corners of the enclosure) but mostly because the transfer impedance is not uniform around the enclosure (lower in proximity to the fasteners).

As an optional exercise, estimate the average transfer impedance of the seam. This may be made by dividing the average measured transfer voltage by the average current density. The average current density can be determined by taking the ratio of the current injected into the enclosure, to the periphery of the seam. The current injected into the enclosure is essentially the short–circuit current of the generator (use Thevenin's Theorem to determine this).

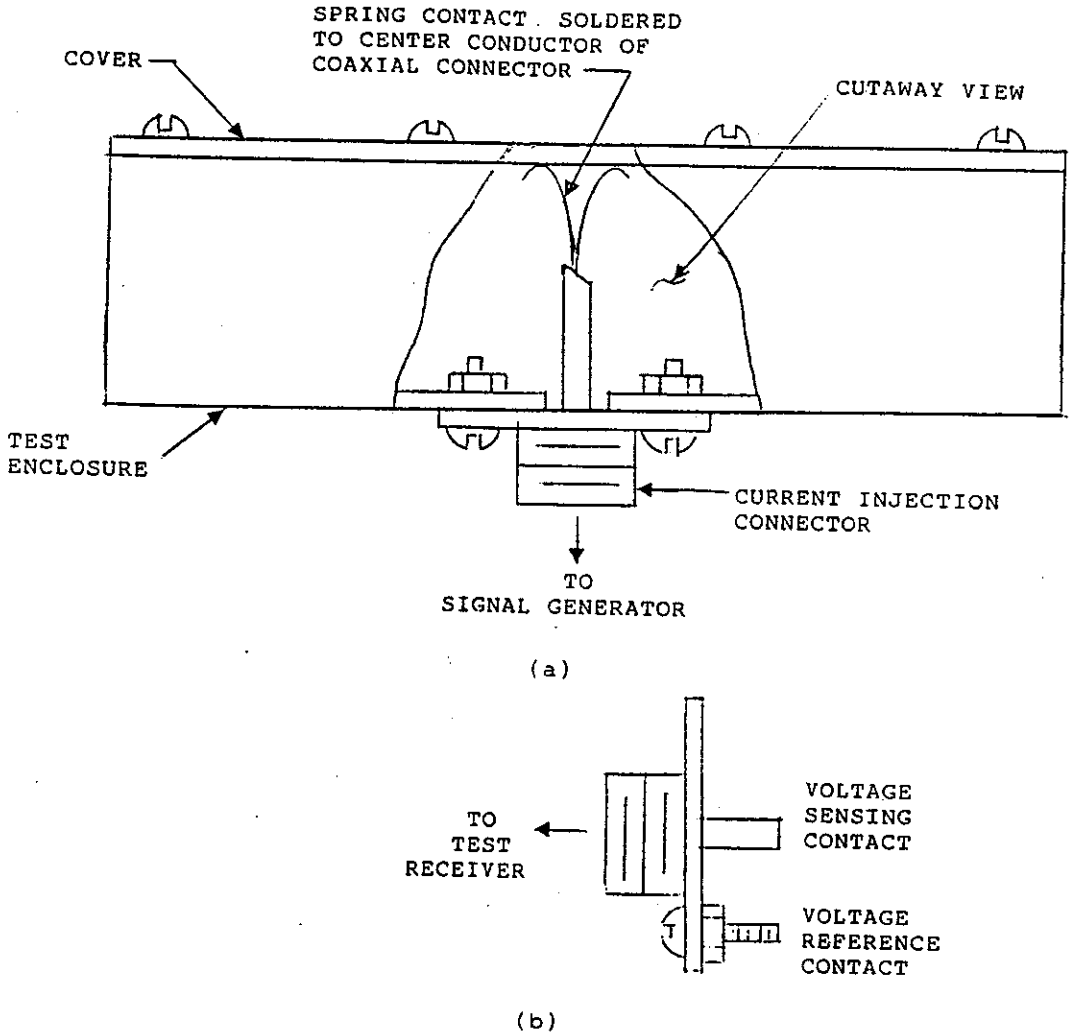

Figure 1. (a) Test Enclosure, showing mounting of Current-Injection connector.
(b) Voltage Probe, showing implementation of a Reference Contact.

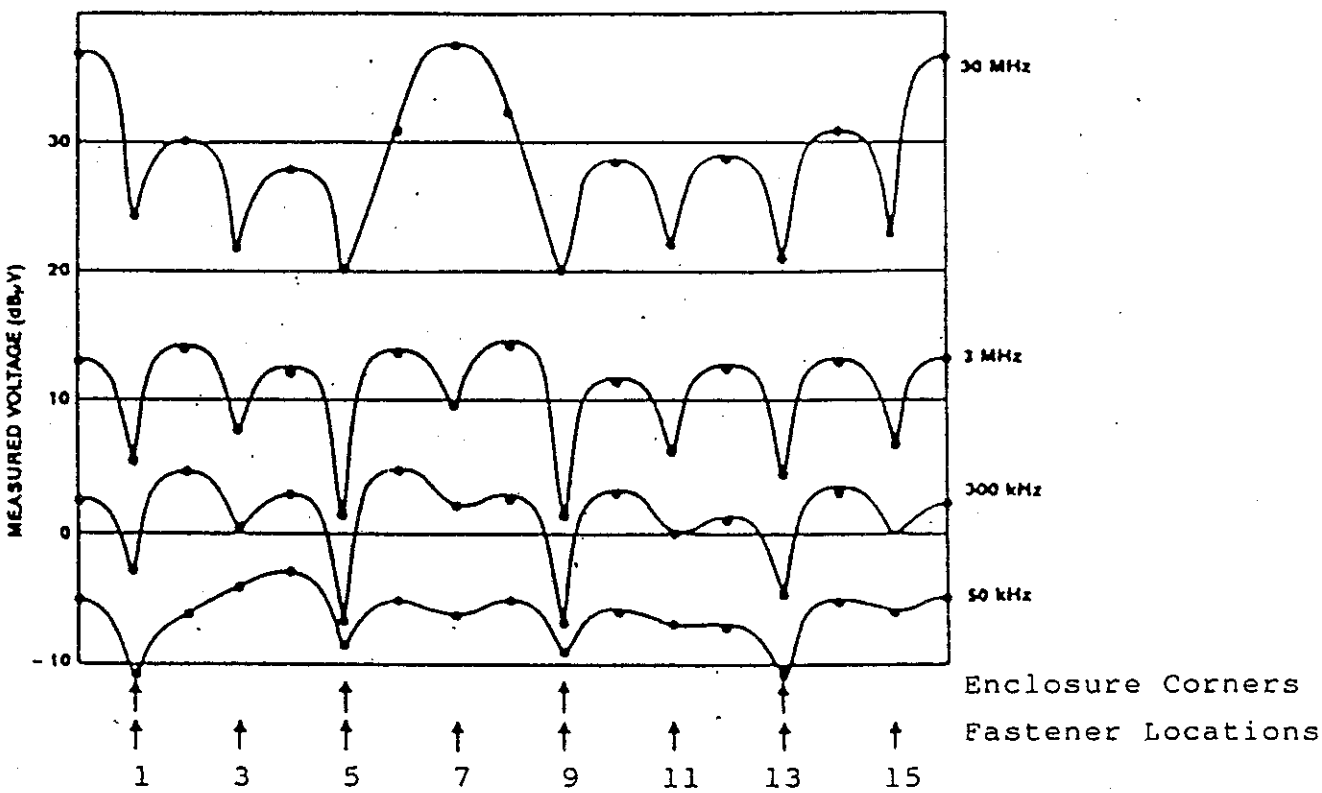

Figure 2. Sample Data Plots.

COMMON–MODE CURRENTS AND RADIATED EMISSIONS OF CABLES

by

Clayton R. Paul
Department of Electrical Engineering
University of Kentucky

1. OBJECTIVE

To illustrate the importance of common–mode currents in the radiated emissions of interconnect cables. To illustrate the use of current probes in measuring these common–mode currents and to show that accurate predictions of the emissions can be obtained with these measured currents.

2. EQUIPMENT

A. The oscillator and board prepared in the experiment **Effect of Pulse Rise/Fall Time on Signal Spectra.**

B. A $1\frac{1}{2}$ foot (18 inches or 45.72 cm) length of 300Ω, parallel wire "twin lead".

C. One 300Ω, 1/8W carbon resistor.

D. One BNC female panel mount connector.

E. One 7805 DC regulator and a 9V battery.

F. One current probe suitable for the frequency range of 10MHz to 100MHz. Preferably this should have its associated calibration chart of transfer impedance. A suggested type is the F–33 probe available from Fischer Custom Communications, Inc. The probe transfer impedance, $Z_T=20\log_{10}(\frac{V}{I})$, is typically 15dBΩ from 10MHz to 100MHz [1]. If such a probe is not available, one can be constructed using a ferrite core (doughnut shape) suitable for the frequency range. Wind numerous turns of magnet wire around it. The magnetic flux due to the common–mode current passing through the doughnut concentrates in the core and induces, by Faraday's law, a voltage at the terminals of the windings [1]. Such a homemade probe will need to be calibrated. This can be done by passing a known current level through the core and measuring the induced voltage in the windings. This gives, at each frequency, the probe transfer impedance, $Z_T=\frac{V_{windings}}{I_{core}}$ [1]. If the signal $V_{windings}$ is too small for the spectrum analyzer, it may be necessary to use a wideband preamp. The core should also have a small air gap at some point on its periphery so that when placed around the current to be measured it will not "load down" the circuit.

G. A spectrum analyzer (50Ω) suitable for sweeping the frequency range 1MHz to 100MHz.

H. A wideband preamp such as the HP8447D 25dB preamp.

I. A 60 inch (1.52m) length of 300Ω twin lead. This will be used to construct a folded dipole antenna typcally used for standard TV reception which is half–wave resonant at the 25th harmonic of the oscillator, 100MHz [2,3]. The antenna factor of a half–wave folded dipole can be computed and gives [1,2,3]

$$E_{ant}(\text{dB}\mu\text{V/m}) = 20\log_{10}f(\text{MHz}) - 2.15 + V_{ant}(\text{dB}\mu\text{V}) - 37.6 \qquad (1)$$

J. A 300Ω–75Ω standard TV BALUN which can be purchased at any electronics shop.
K. One BNC male/male connector.

3. PROCEDURE

3.1 Device Construction

1. Solder the 300Ω resistor to one end of the twin lead and the BNC panel mount connector to the other end.
2. Construct the oscillator board described in the experiment **Effect of Pulse Rise/Fall Time on Signal Spectra** and attach to the twin lead with the BNC male/male connector.
3. Construct a compact, regulated 5V DC power supply with the 9V battery and the 7805 regulator chip. Connect to the oscillator board with short leads.
4. Construct the folded dipole by shorting the two ends of the length of twin lead. At the midpoint insert the 300Ω side of the BALUN in series with one side of the dipole.

3.2 Measurement of Radiated Emissions

1. Place the twin lead parallel to and a height of 1m above the ground outside of the building. Place the measurement antenna 3m away from the twin lead (the FCC Class B measurement distance), 1m above the ground and parallel to the twin lead.
2. Connect the antenna to the spectrum analyzer through the 25dB preamp and record the antenna voltage (turn on the oscillator first) at 100MHz (the 25th harmonic of the 4MHz oscillator) as well as at a number of the lower harmonics of the oscillator.
3. Using the antenna factor calibration for the folded dipole given above convert the measured voltages to electric field values and plot them versus the FCC Class B limit [1]. The author measured voltage at 100MHz was 55dBμV. Subtracting the 25dB gain of the preamp and substituting into (1) gives E=30.25dBμV/m.

3.3 Measurement of Common–Mode Current on the Cable

1. Place the current probe around the twin lead midway along its length.
2. Connect the current probe to the spectrum analyzer through the 25dB preamp with a length of 50Ω coaxial cable and record the measured levels at the harmonics of the oscillator.
3. Using the current probe's transfer impedance calibration chart convert the measured voltages to the (common–mode) current on the cable at each harmonic. The author measured a value of 57dBμV at 100MHz. Subtracting 25dB for the preamp gives 32dBμV. This is converted to the current by subtracting the current probe transfer impedance (15dBΩ for the F–33 probe) to give a common–mode current at the 25th harmonic of 100MHz of 17dBμA.

3.4 Prediction of the Emissions

1. Using the measured common–mode current levels try to predict the measured electric field emissions using [1]

$$E = 1.257\times10^{-6}\,\frac{I_C\ f\ \ \mathscr{L}=45.72\text{cm}}{d=3\text{m}} \qquad (2)$$

For the experiment, the author obtained a measured value of 30.25dBμV/m at 100MHz and a predicted value using the measured common–mode current of 36.6dBμV/m using (2).

2. Plot the predictions vs. the measured emissions in dBμV/m on semilog graph paper (1 cycle).

4. THEORY

4.1 Common–Mode Currents and their Significance

Consider Figure 1 in which we have shown two parallel wires of length $\mathscr{L}$ and separation d. The currents in the two wires at a crossection are denoted I_1 and I_2. These may be

decomposed into *differential–mode* components, I_D, and *common–mode* components, I_C, as

$$I_1 = I_C + I_D \tag{3a}$$
$$I_2 = I_C - I_D \tag{3b}$$

Adding and subtracting these give

$$I_C = \frac{I_1 + I_2}{2} \tag{4a}$$
$$I_D = \frac{I_1 - I_2}{2} \tag{4b}$$

The *differential–mode* currents are the functional or desired currents that are predicted by Kirchhoff's laws and the usual lumped–circuit theory. These are equal in magnitude but oppositely directed at a cross section. The *common–mode* currents are equal in magnitude but directed in the same direction at a cross section. They are usually much smaller than the differential–mode currents and are not necessary for function performance. These are not ideally present and are due to asymmetries, nearby metallic planes, etc. However, Figure 1 shows that the electric fields due to the differential–mode currents are oppositely directed as are the differential–mode currents. These fields therefore subtract but because the currents are not collocated, these fields do not cancel. However, the common–mode currents and their associated fields are directed in the same direction and so add. Consequently, a "small" amount of common–mode current can result in the same radiated electric field as a much larger differential–mode current. It is for this reason that common–mode currents tend to be the dominant contributors to the radiated emissions of parallel conductors such as cables. A common method of suppressing these common–mode currents is with ferrite common–mode chokes [1]. The rudimentary current probe suggested above will act, to some degree, as a common–mode choke and will affect the common–mode current. Practical current probes have a small air gap to minimize this loading.

5. REFERENCES

1. C.R. Paul, **Introduction to Electromagnetic Compatibility**, John Wiley & Sons, NY, 1992, Chapter 8.
2. R.K. Keenan, **Digital Design for Interference Specifications**, The Keenan Corporation, Pinellas Park, FL, 1983.
3. W.L. Stutzman and G.A. Thiele, **Antenna Theory and Design**, John Wiley, NY, 1981.

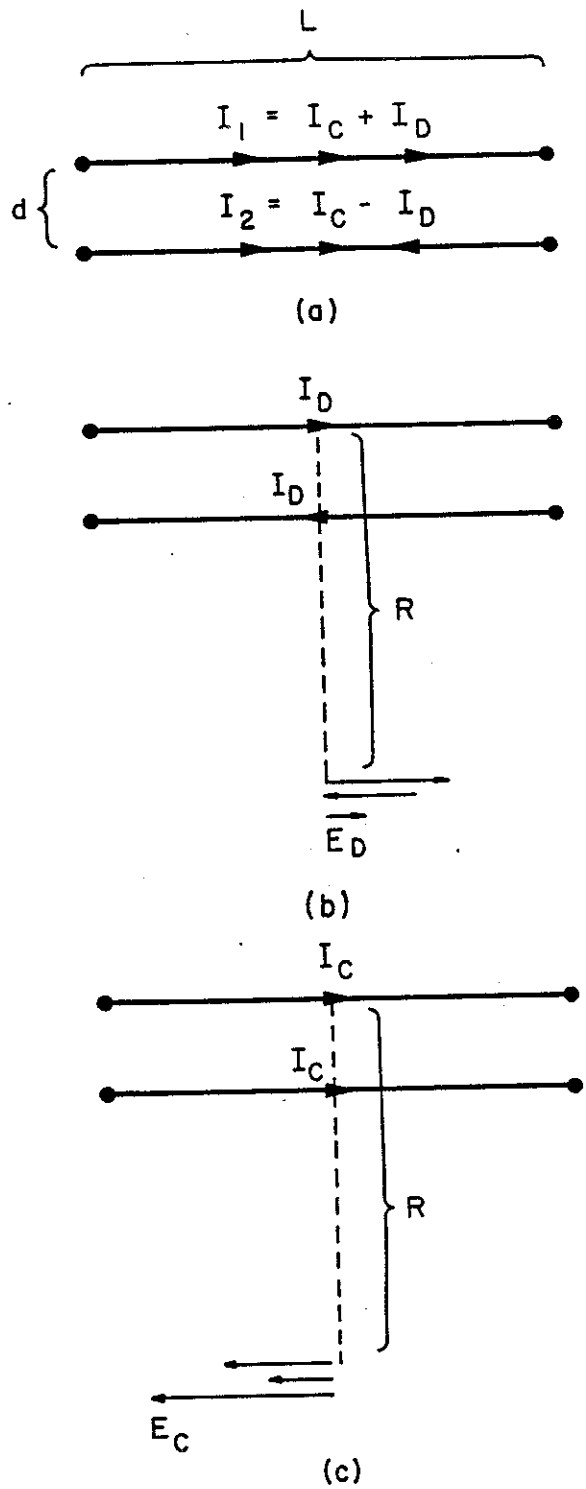

Fig. 1. Illustration of the effect of common–mode and differential–mode currents on the radiated emissions of cables.

TABLE OF CONTENTS

TABLE OF CONTENTS (CONT'D)

EMC BIBLIOGRAPHY

COMPANY STANDARDS

Name: **FORD SPECIFICATION ES-E3GF-1316-AA - ELECTROMAGNETIC COMPATIBILITY CONFORMANCE**
Source: Ford Motor Co.
Abstract:

Name: **JDQ 53 - ENVIRONMENTAL DESIGN AND TESTING OF ELECTRONIC COMPONENTS**
Source: John Deere Co.
Abstract:

Name: **TRW 4420A - GENERAL ENVIRONMENTAL SPECIFICATION**
Source: TRW Inc.
Abstract:

ON-LINE DATABASES

Name: **FINDING YOUR WAY**
Source: Institute of Electrical and Electronic Engineers (IEEE)
Abstract: Incudes references to IEEE Standards, tutorial papers, tutorial books, IEEE periodicals, and IEEE Meetings and courses.

Name: **COMPENDEX**
Source: Engineering Information, Inc.
Abstract: This database is the machine-readable version of the Engineering Index" (Monthly/Annual) which provides abstracted information from the World's significant engineering and technological literature.

Name: **INSPEC**
Source: Institute of Electrical and Electronic Engineers (IEEE)
Abstract: Largest English language database in the fields of physics, electro-technology, computers and control.

Name: **NTIS**
Source: National Technical Information Service (US Dept. of Commerce)
Abstract: Government sponsored R&D, engineering, analyses prepared by Federal agencies such as NASA, DOD, DDC, DOE, DOT, Dept. of Commerce and 240 other units.

Name: **STANDARDS SEARCH**
Source: Society of Automotive Engineers (SAE)
Abstract: This database has been developed by SAE and ASTM. It provides bibliographic information for more than 11,000 SAE and ASTM documents that deal with standards, specifications, test methods, recommended practices, guidelines and definitions.

INDUSTRY STANDARDS

AMERICAN NATIONAL STANDARDS INSTITUTE (ANSI)

Name: **ANSI C62.41 - SURGE VOLTAGES IN LOW-VOLTAGE AC POWER CIRCUITS**

Abstract: Testing for AC line transient immunity; defines both a unidirectional" pulse waveform and a ringing" wave, deemed to be worst-case types of expected transient waveforms in Industry. Categorization of transients into four severity categories for their effect on electronic equipment; representative surge voltages and currents are given for recommended design use in protective systems.

Name: **ANSI C63.2 - 1987, AMERICAN NATIONAL STANDARD FOR INSTRUMENTATION–ELECTROMAGNETIC NOISE AND FIELD STRENGTH, 10 kHz TO 1 GHz**

Abstract: This standard delineates the requirements of electromagnetic noise instrumentation for the frequency range of 10 kHz to 1000 MHz incorporating quasi-peak, peak, rms and average detectors. Spectrum analyzers are not covered in this standard.

Name: **ANSI C63.4-1991, AMERICAN NATIONAL STANDARD METHODS OF MEASUREMENT OF RADIO-NOISE EMISSIONS FROM LOW-VOLTAGE ELECTRICAL AND ELECTRONIC EQUIPMENT IN THE RANGE OF 9 kHz-40 GHz**

Abstract: Methods of measurements of radiated and powerline radio noise from low-voltage (10 kHz - 40 GHz) electrical/electronic individual components and/or systems.

Name: **C63.5-1988, AMERICAN NATIONAL STANDARD FOR CALIBRATION OF ANTENNAS USED FOR RADIATED EMISSION MEASUREMENTS IN ELECTROMAGNETIC INTERFERENCE (EMI) CONTROL**

Abstract:

Name: **C63.6-1988, AMERICAN NATIONAL STANDARD GUIDE FOR THE COMPUTATION OF ERRORS IN OPEN-AREA TEST SITE MEASUREMENTS**

Abstract:

Name: **63.7-1988, AMERICAN NATIONAL STANDARD GUIDE FOR CONSTRUCTION OF OPEN AREA TEST SITES FOR PERFORMING RADIATED EMISSION MEASUREMENTS**

Abstract:

Name: **ANSI C63.12-1987 AMERICAN NATIONAL STANDARD FOR ELECTROMAGNETIC COMPATIBILITY LIMITS--RECOMMENDED PRACTICE**

Abstract: The purposes of this standard is to:

1. Discuss the general properties of environmental radio noise of both man-made and natural origin.
2. Identify the several types of devices commonly used for measurement of radio noise and provide information on their properties which will assist the practitioner in selecting such equipment and associated measurement techniques for his application.
3. Discuss the rationale which can be used in selecting a consistent set of limits for emission and susceptibility subject to various environmental constraints.
4. Based on the above, to provide a suggested set of limits which may find general application, at least for reference purposes.

Name: **ANSI C95.1 - SAFETY LEVELS WITH RESPECT TO HUMAN EXPOSURE TO RADIO FREQUENCY ELECTROMAGNETIC FIELDS, 300 KHZ TO 100 GHZ**

Abstract:

Name: **ANSI C95.2 - RADIO FREQUENCY RADIATION WARNING SYMBOL**

Abstract:

Name: **ANSI C95.3 - TECHNIQUES AND INSTRUMENTATION FOR MEASUREMENT OF POTENTIALLY HAZARDOUS ELECTROMAGNETIC FIELDS, RF AND MICROWAVE**

Abstract: Establishes specifications for techniques and instrumentation to be used in evaluating radio-frequency hazards to mankind, flammable volatile materials, and explosive devices.

Name: **ANSI C95.4 - SAFETY GUIDE FOR THE PREVENTION OF RF RADIATION HAZARD IN THE USE OF ELECTRIC BLASTING CAPS**

Abstract:

Name: **ANSI C95.5 - RECOMMENDED PRACTICE FOR THE MEASUREMENT OF HAZARDOUS ELECTROMAGNETIC FIELDS, RF AND MICROWAVE**

Abstract: This recommended practice describes techniques and procedures for the measurement of potentially hazardous electromagnetic fields both in the near field and far field of the electro-magnetic source. The techniques and instrumentation described in the recommended practice are applicable to the measurement of electromagnetic fields in the neighborhood of flammable materials, explosive devices, and personnel.

COMPUTER AND BUSINESS EQUIPMENT MANUFACTURERS ASSOCIATION (CBEMA)

Name: **CBEMA/ECS5 5/20/77 - LIMITS AND METHODS OF MEASUREMENT OF ELECTROMAGNETIC EMANATIONS FROM ELECTRONIC DATA PROCESSING AND OFFICE EQUIPMENT**

Abstract:

INTERNATIONAL SPECIAL COMMITTEE ON RADIO INTERFERENCE (CISPR)

Abstract: These documents cover compliance of radio interference measuring equipment with CISPR recommendations, limits for the mains interference immunity factor of long and medium wave radio receivers and other topics.

Amendment 1: General principles to be observed in the measurement of interference from power lines.

Pub. 7A FIRST SUPPLEMENT TO PUB. 7

Abstract: Covers operational frequencies of r.f. wood gluing and heating equipment, limits and methods of measurement of interference voltage for regulating controls incorporating semiconductor devices, scales for the subjective assessment of picture quality, impairment and comparison and measurement of the duration of disturbances less than 10 ms.

Pub. 7B SECOND SUPPLEMENT TO PUB. 7

Abstract: Covers recommendations on sources of interference, interference from ignition systems, measurement of interference from appliances incorporating electric motors, limits of interference, interference limits for appliance electric motors in the range 30 MHz to 300 MHz and measurement and evaluation of radio noise produced by switching operations of electrical appliances for households.

Pub. 8 REPORTS AND STUDY QUESTIONS

Abstract: Contains Reports on subjects such as: Effect of the insertion of an impedance in the connection between the frame of an appliance and earth, interference from power lines, propagation of radio interference on high-voltage transmission lines, and others. Also contains Study Questions on EMC related subjects such as effect of interference on various communication systems, interference from industrial, scientific and medical radio-frequency equipment, limits of interference caused by power lines and others.

There are currently four supplements (Pub. 8A through 8D) to Pub. 8 which contain additional Reports and Study Questions.

Pub. 9 LIMITS OF RADIO INTERFERENCE AND LEAKAGE CURRENTS ACCORDING TO CISPR AND NATIONAL REGULATIONS

Abstract: Reproduces in tabular form the limits of interference recommended by the CISPR for national adoption. National limits of interference are also listed. The full texts of the CISPR recommendations are contained in CISPR Pubs. 7, 7A and 7B.

Pub. 10 ORGANIZATIONS AND RULES OF CISPR

Abstract: Gives the historical background, terms of reference, composition, organization, and publication procedures of CISPR which is under the sponsorship of the IEC.

Pub. 11 ISM LIMITS AND MEASUREMENTS

Abstract: Applies to the radiation of electromagnetic energy from industrial, scientific and medical (ISM) radio frequency equipment which may cause interference to radio reception. Establishes uniform requirements for the radio interference suppression of ISM radio-frequency equipment, fixes limits of interference, describes methods of measurement and gives guidance. Pub. 11 also has an Amendment 1 and a First Supplement (Pub. 11A).

Pub. 12 LIMITS AND METHODS OF MEASUREMENT OF RADIO INTERFERENCE CHARACTERISTICS OF VEHICLES, MOTOR BOATS AND SPARK IGNITED ENGINE-DRIVEN DEVICES

Abstract: Applies to the radiation of electromagnetic energy which may cause interference to radio reception and which is emitted from: electrical and internal combustion engine vehicles, motor boats and other devices equipped with a spark-ignited internal combustion engine. Does not cover aircraft, railway traction vehicles or incomplete vehicles.

Pub. 13 TV AND AUDIO RECEIVER LIMITS AND MEASUREMENTS

Abstract: Applies to the generation of electromagnetic energy from broadcast sound and television receivers and to their immunity to all types of interference. Describes the methods of measurement and specifies the limits for the control of interference.

Pub. 14 LIMITS AND METHODS OF MEASUREMENT OF RADIO INTERFERENCE CHARACTERISTICS OF HOUSEHOLD APPLIANCES, PORTABLE TOOLS AND SIMILAR ELECTRICAL APPARATUS

Abstract: This document applies to the measurement of conducted and radiated EMI emissions from house hold appliances and portable tools. Methods of measurement for conducted emission are given for the frequency ranges of 150kHz to 30MHz and 30MHz to 300 MHz. Radiated emission measurement is made through the frequency range 30MHz to 300MHz. Test set-up conditions and test limits are specified; also given is a procedure for statistically assessing compliance for production sampling of manufactured units.

Devices which exhibit momentary, or discontinuous interferences, are restricted by a click" count, a click being defined as a noise disturbance separated from a subsequent disturbance by at least 200 milliseconds.

Pub. 15 LIMITS AND METHODS OF MEASUREMENT OF RADIO INTERFERENCE CHARACTERISTICS OF FLUORESCENT LAMPS AND LUMINARIES

Abstract: Applies to the conduction and the radiation of electromagnetic energy from fluorescent lamps and luminaries which may cause interference to radio reception; establishes uniform requirements for the radio interference suppression of fluorescent lamps and luminaries, fixes limits of interference, describes methods of measurement and gives guidance for methods of measurement of the insertion loss and of interference voltages of switch-start fluorescent lamp luminaries. Frequency range covered is 160 kHz to 1400 kHz.

Pub. 16 CISPR SPECIFICATION FOR RADIO INTERFERENCE MEASURING APPARATUS AND MEASUREMENT METHODS

Abstract: Describes a special procedure for the measurement of interference sources producing discontinuous interference. Includes the texts of all formal documents, recommendations, specifications and reports of the CISPR which pertain to radio interference measuring apparatus and general radio interference measurement methods.

Pub. 17 METHODS OF MEASUREMENT OF THE SUPPRESSION CHARACTERISTICS OF PASSIVE RADIO INTERFERENCE FILTERS AND SUPPRESSION COMPONENTS

Abstract: Prescribes methods of measurement of insertion loss of passive radio frequency suppression filters, which may consist of single elements, such as capacitors, inductors or resistors, or combinations of these components. The methods include those for use in the laboratory or on a production line.

Pub. 18 RADIO INTERFERENCE CHARACTERISTICS OF OVERHEAD POWER LINES AND HIGH VOLTAGE EQUIPMENT

Abstract: Applies to radio noise from overhead power lines and high voltage equipment which may cause interference to radio reception, excluding the fields from power line carrier signals. The frequency range is 0.15 MHz to 300 MHz. Discusses the physical phenomena involved in the generation of electromagnetic noise fields.

Pub. 19 GUIDANCE ON THE USE OF THE SUBSTITUTION METHOD FOR MEASUREMENT OF RADIATION FROM MICROWAVE OVENS FOR FREQUENCIES ABOVE 1 GHz

Abstract: Describes a method of measurement for small microwave ovens (largest dimension less than 1 m) and a separate method of measurement for large microwave ovens (largest dimension exceeding 1 m).

Pub. 22 INFORMATION TECHNOLOGY EQUIPMENT: LIMITS OF INTERFERENCE AND MEASUREMENT METHODS

Abstract:

Name: **CISPR SQ87 - MAN-MADE ELECTRONIC ENVIRONMENT**

ELECTRONIC INDUSTRIES ASSOCIATIONS (EIA)

Name: **EIA RS 163 - RF REDUCTION LABEL**
Abstract:
Name: **EIA RS 204 - MINIMUM STANDARDS FOR LAND MOBILE COMMUNICATION FM OR PM RECEIVERS, 25-470 MHZ**
Abstract:
Name: **EIA RS 316 - MINIMUM STANDARDS FOR PORTABLE/PERSONAL LAND MOBILE COMMUNICATIONS FM OR PM EQUIPMENT 25-470 MHZ**
Abstract:
Name: **EIA RS 361 - FEED THROUGH RADIO INTERFERENCE CAPACITORS-PAPER, FILM, AND PAPER/FILM DIELECTRIC**
Abstract:
Name: **EIA RS 378 - MEASUREMENT OF SPURIOUS RADIATION FROM FM AND TV BROADCAST RECEIVERS IN THE FREQUENCY RANGE OF 100 TO 1000 MHZ, USING THE EIA-LAUREL BROADCAST BAND ANTENNA**
Abstract:
Name: **EIA 416 - FILTERS, RADIO INTERFERENCE**
Abstract:
Name: **EIA TR 8.10 - IGNITION INTERFERENCE SUSCEPTIBILITY MEASUREMENT CORRELATION**
Abstract:
Name: **EIA BULLETIN 1-10 - DESIGNER'S GUIDE ON EMC**
Abstract:
Name: **EIA BULLETIN 10 - INTERFERENCE CRITERIA FOR MICROWAVE SYSTEMS IN THE SAFETY AND SPECIAL RADIO SERVICES**
Abstract:
Name: **EIA STANDARD 544-1988 - IMMUNITY OF TV TUNERS TO INTERNALLY GENERATED HARMONIC INTERFERENCE FROM SIGNALS IN THE BAND, 535 kHz TO 30 MHz.**
Abstract:
Name: **EIA STANDARD 572-1989 - IMMUNITY OF TELEVISION RECEIVERS AND VIDEO CASSETTE RECORDERS (VCR's) TO DIRECT RADIATION FROM RADIO TRANSMISSIONS, 0.5 TO 30 MHz.**
Abstract:

FEDERAL COMMUNICATIONS COMMISSION (FCC)

Name: **FCC RULES AND REGULATIONS VOLUME 1; PART 2 & PART 15**
Abstract: Emissions regulations for Radio frequency (RF) devices including computers using digital techniques and a clock frequency of 10 KHz or higher. Current exemptions include transportation applications, public utility and industrial applications, test equipment and appliances.
Name: **FCC RULES AND REGULATIONS VOLUME 1; PART 18**
Abstract: Covers industrial, scientific and medical equipment.

INSTITUTE OF ELECTRICAL AND ELECTRONIC ENGINEERS (IEEE)

Name: **IEEE Std. 100 - STANDARD DICTIONARY OF ELECTRICAL AND ELECTRONIC TERMS**

Abstract: Standard dictionary of electrical and electronic terms.

Name: **IEEE Std. 139 - RECOMMENDED PRACTICE FOR MEASUREMENT OF FIELD INTENSITY ABOVE 300 MHZ FROM RADIO FREQUENCY INDUSTRIAL, SCIENTIFIC AND MEDICAL EQUIPMENT**

Abstract: Information is given on methods of measurement, antenna design, and equipments used in making field intensity measurements. It is hoped that this information will serve as a guide to those making field intensity measurements above 300 MHz.

Name: **IEEE Std. 140 - RECOMMENDED PRACTICE FOR MINIMIZATION OF INTERFERENCE FROM RADIO FREQUENCY HEATING EQUIPMENT**

Abstract:

Name: **IEEE Std. 187 - OPEN FIELD METHOD OF MEASUREMENT OF SPURIOUS RADIATION FROM FREQUENCY MODULATION AND TELEVISION BROADCAST RECEIVERS**

Abstract:

Name: **IEEE Std. 213 - RADIO INTERFERENCE: METHODS OF MEASUREMENT OF CONDUCTED INTERFERENCE OUTPUT TO THE POWER LINE FROM FM AND TELEVISION BROADCAST RECEIVERS IN THE RANGE OF 300 kHz to 25 MHz**

Abstract:

Name: **IEEE Std. 263 - STANDARD FOR MEASUREMENT OF RADIO NOISE GENERATED BY MOTOR VEHICLES AND AFFECTING MOBILE COMMUNICATIONS RECEIVERS IN THE FREQUENCY RANGE OF 25 TO 1000 MHz**

Abstract: The purpose of this standard is to provide a uniform method of measurement of radio noise generated by a motor vehicle, which may affect the performance of mobile communications receivers in the vehicle.

Name: **IEEE Std. 284 - STANDARDS REPORT OF THE STATE-OF-THE-ART OF MEASURING FIELD STRENGTH, CONTINUOUS WAVE, SINUSOIDAL**

Abstract: This document is a Report on the state-of-the-art of measuring field strength of radio-frequency electro magnetic waves, with respect to available and desirable accuracies, general principles of measurement techniques and calibration methods, and references to pertinent literature.

Name: **IEE Std. 291-1991 - METHODS FOR MEASURING ELECTROMAGNETIC FIELD STRENGTH OF SINUSOIDAL CONTINUOUS WAVES, 30 Hz to 30 GHz**

Abstract: Two standard methods for field-strength measurement are described. The standard antenna method consists of measuring the received power or open-circuit voltage developed in a standard receiving antenna by the field to be measured and computing the field strength from the measured voltage and the dimensions and form of the standard antenna. The standard-field method consists of comparing voltages produced in an antenna by the field to be measured and by a standard field, the magnitude of which is computed from the dimensions of the transmitting antenna, its current distribution, the distance of separation, and effect of the ground, The measurement procedures are outlined, including calibration of commercial field strength and extension of the methods to microwave frequencies. Methods for measuring power radiated from an antenna under several different conditions are briefly presented, and the important considerations for securing useful and accurate measurements are described.

Name: **IEEE Std. 294 - MEASURING NOISE TEMPERATURE OF NOISE GENERATORS**

Abstract:

Name: **IEEE Std. 299 - METHOD FOR MEASURING THE EFFECTIVENESS OF ELECTROMAGNETIC SHIELDING ENCLOSURES**

Abstract: Uniform measurement procedures and techniques are provided for determining the effectiveness of room-sized, high-performance electromagnetic shielding enclosures at frequencies from 14 kHz to 18 GHz (extendable to 50 Hz and 100 GHz respectively). The types of enclosure covered include single-shield or double-shield structures of various constructions such as bolted demountable, welded, or integral with building and made of materials such as steel plate, copper or aluminum sheet, screening hardware cloth or metal foil. The intent is to reflect current practice and to provide a common reference for suppliers and users on the performance of shielding enclosures.

Name: **IEEE Std. 302 - STANDARD METHODS FOR MEASURING ELECTROMAGNETIC FIELD STRENGTH FOR FREQUENCIES BELOW 1000 MHz IN RADIO WAVE PROPAGATION**

Abstract:

Name: **IEEE Std. 314 - STANDARDS REPORT ON STATE OF THE ART OF MEASURING UNBALANCED TRANSMISSION LINE IMPEDANCE**

Abstract: This document is concerned with reporting the state of the art of measuring impedance in distributed parameter coaxial waveguide systems, propagating a TEM wave. The data has been organized into tables according to levels or echelons of accuracy ranging from that of the National Standard to that of the instruments used by the consumer.

Name: **IEEE Std. 368 - RECOMMENDED PRACTICE FOR MEASUREMENT OF ELECTRICAL NOISE AND HARMONIC FILTER PERFORMANCE OF HIGH VOLTAGE DIRECT CURRENT SYSTEMS**

Abstract: Establishes uniform methods of measuring harmonic filters and testing for the presence of noise on and in proximity to HVdc transmission systems and their associated ac systems. Frequencies of concern include the voice band 120 to 5000 Hz and carrier band 5 to 100 kHz and above. Does not address RFI effects from HVdc converter stations and HVdc transmission lines.

Name: **IEEE Std. 376 - MEASUREMENT OF IMPULSE STRENGTH AND IMPULSE BANDWIDTH**

Abstract: For many purposes in radio interference and electromagnetic compatibility work, it has become convenient to measure broadband emission in terms of peak voltage or field strength, especially with the use of automatic spectrum scanning instrumentation. Because of the simplicity of the impulse generator, it is used frequently for calibration purposes. This standard provides basic information relating to the use of this device and interpretation of measurements made using instruments based on it.

Name: **IEEE Std. 377 - SPURIOUS EMISSIONS FROM LAND MOBILE COMMUNICATIONS TRANSMITTERS**

Abstract: Covers spurious emissions of mobile communication transmitters generating frequency modulated (FM) signals in the frequency range of 25 MHz to 1000 MHz. Procedures for measuring both broadband and narrowband spectra are provided for both conducted and radiated emissions.

Name: **IEEE Std. 430 - STANDARD PROCEDURES FOR THE MEASUREMENT OF RADIO NOISE FROM OVERHEAD POWER LINES**

Abstract: Procedures for measurement of radiation of radio noise from overhead power lines. Procedure applies in the frequency range of 0.015 to 30 MHz. A procedure for frequency range of 20 to 1000 MHz is provided as a guide only.

Name: **IEEE Std. 472 - GUIDE FOR SURGE WITHSTAND CAPABILITY (SWC) TESTS**

Abstract:

Name: **IEEE Std. 473 - ELECTROMAGNETIC AMBIENT SITE SURVEYING**

Abstract: The objective of this recommended practice is to preserve necessary freedom of choice and to make due allowance for individuality in survey practice while carefully articulating those elements of radio- frequency surveying that can and should be common to all undertakings.

Name: **IEEE Std. 475 - MEASUREMENT PROCEDURES FOR A FIELD DISTURBANCE SENSOR**

Abstract: Test procedure for field disturbance sensors to measure radio-frequency (rf), radiated field strength of the fundamental frequency range from 0.3 GHz to 40 GHz. In addition, powerline measurement of electromagnetic emission within the frequency range from 30 MHz to 300 MHz is also specified.

Name: **IEEE Std. 478 - METHOD OF TESTING CONNECTOR SHIELDING EFFECTIVENESS**
Abstract:

Name: **IEEE Std. 482 - METHOD OF TESTING CABLE SHIELD TRANSFER IMPEDANCE**
Abstract:

Name: **IEEE Std. 509 - MEASUREMENT OF SHIELDING CHARACTERISTICS OF EMI GASKETS AND FINGERSTOCK**
Abstract:

Name: **IEEE Std. 518 - GUIDE FOR THE INSTALLATION OF ELECTRICAL EQUIPMENT TO MINIMIZE NOISE INPUTS TO CONTROLLERS FROM EXTERNAL SOURCES**
Abstract:

Name: **IEEE Std. 539 - DEFINITIONS OF TERMS RELATING TO OVERHEAD POWER LINES CORONA AND RADIO NOISE**
Abstract: The purpose of this standard is to provide uniformity in the terms used in the field of corona and radio noise. Its scope is to define the most widely used terms specific to or associated with overhead-power-line corona and radio noise.

Name: **IEEE Std. 587 - GUIDE FOR SURGE VOLTAGES IN LOW-VOLTAGE AC POWER CIRCUITS**
Abstract: See ANSI C62.41

Name: **IEEE Std. 626 - SIGNAL GROUNDING PRACTICES**
Abstract:

Name: **IEEE Std. 644 - STANDARD MEASUREMENTS OF ELECTRIC AND MAGNETIC FIELDS FOR ALTERNATING CURRENT POWER LINES**
Abstract: Measurement of steady state electric and magnetic fields from alternating current overhead powerlines and for the calibration of the meters used in these measurements. Applies to the measurement of the near fields close to ground level.

NATIONAL ELECTRICAL MANUFACTURERS ASSOCIATION (NEMA)

Name: **NEMA ICS 2-230 - SUSCEPTIBILITY: LOGIC SYSTEM COMPONENTS**
Abstract: Part ICS 2-230 is contained in NEMA Pub. ICS 2, Standards for Industrial Control Devices, Controllers and Assemblies. Covers the components used in solid-state logic systems for industrial applications. The standards in this part do not apply to systems for which the precautions necessary to provide immunity from electrical noise are taken in the installation under the direction of the manufacturer. This standard defines the "Showering Arc" test.

Name: **NEMA ICS 3-304 - SUSCEPTIBILITY: PROGRAMMABLE CONTROLLERS**
Abstract: Part ICS 3-304 is contained in NEMA Pub. ICS 3, Industrial Systems. It provides information concerning the construction, programming, performance, test, installation, protection and safety of programmable controllers.

NATIONAL FIRE PROTECTION AGENCY (NFPA)

Name: **NFPA 77-1972 - STATIC ELECTRICITY, RECOMMENDED PRACTICE ON**
Abstract:

Name: **NFPA 78-1968 - LIGHTNING PROTECTION CODE**
Abstract: This code covers lightning protection requirements for ordinary buildings, miscellaneous structures and special occupancies, heavy duty stacks, and structures containing flammable liquids and gasses. It does not cover explosives manufacturing buildings and magazines or electric generating, transmission and distribution systems.

SOCIETY OF AUTOMOTIVE ENGINEERS (SAE)

Name: **AIR 1147 - EMI ON AIRCRAFT FROM JET ENGINE CHARGING**
Abstract: This Information Report discusses aircraft charging due to jet exhaust and some options for relieving the static build-up on the airframe.

Name: **AIR 1208 - BIBLIOGRAPHY - LIGHTNING AND PRECIPITATION STATIC**
Abstract: A bibliography on lightning and static electrification on aerospace systems prepared by the Lightning & Precipitation Static Subcommittee, AE-4e.6 of SAE. It is oriented toward aircraft and rocket system lightning protection including ground systems and is limited to the directly applicable papers.

Name: **AIR 1209 - CONSTRUCTION AND CALIBRATION OF PARALLEL PLATE TRANSMISSION LINE FOR ELECTROMAGNETIC INTERFERENCE SUSCEPTIBILITY TESTING**
Abstract: This report is intended to provide information relating to the construction, calibration and usage of parallel plate transmission lines in electromagnetic compatibility susceptibility testing.

Name: **AIR 1221 - EMC SYSTEM DESIGN REQUIREMENTS**
Abstract: This checklist is to be used by project personnel to assure that factors required for adequate system electromagnetic compatibility are considered and incorporated into a program. It provides a ready reference of EMC Management and documentation requirements for a particular program from pre-proposal through acquisition. When considered with individual equipments comprising the system and the electromagnetic operational environment in which the system will operate, the checklist will aid in the preparation of an EMC analysis. The analysis will facilitate the development of system-dependent EMC criteria and detailed system, sub-system, and equipment design requirements ensuring electromagnetic compatibility.

Name: **AIR 1255 - SPECTRUM ANALYZERS FOR EMI MEASUREMENTS**
Abstract: This AIR was prepared to inform the aerospace industry about the electromagnetic interference measurement capability of spectrum analyzers. The spectrum analyzers considered are of the wide dispersion type which are electronically tuned over an octave or wider frequency range. The reason for limiting the AIR to this type of spectrum analyzer is that several manufacturers produce them as general-purpose instruments, and their use for EMI measurement will give significant time and cost savings. The objective of the AIR is to give a description of the spectrum analyzers, consider the analyzer parameters, and describe how the analyzers are usable for collection of EMI data. The operator of a spectrum analyzer should be thoroughly familiar with the analyzer and the technical concepts reviewed in this AIR before performing EMI measurements.

Name: **AIR 1394 - CABLING GUIDELINES FOR ELECTROMAGNETIC COMPATIBILITY**
Abstract: These cable practice recommendations tend toward design guidance rather than standardization. EMC achievement tests can be standardized, but the means for achievement should not be constrained. The material can best be described as an

essay on cabling, and the theme is that a cable is just a part of a complete circuit, the interconnect circuit. Cable EMC performance is thus determined largely by circuit design; it is unrealistic to expect cabling techniques to compensate for improper impedance, symmetry or waveform in the circuit.

Name: **AIR 1404 - DC RESISTIVITY VS. R.F. IMPEDANCE OF EMI GASKETS**
Abstract: Periodically there have been misunderstandings by people in the electronic industry concerning what makes a good EMI gasket. Specifically, DC resistivity requirements are often mentioned incorrectly. This AIR discusses the significance of DC resistance.

Name: **AIR 1406 - LIGHTNING PROTECTION AND STATIC ELECTRIFICATION**
Abstract: This report presents a brief summary of the environment and the present state of the art of lightning protection and static electrification reduction for aerospace systems. For more information, see AIR 1208.

Name: **AIR 1423 - EMC ON GAS TURBINE ENGINES FOR AIRCRAFT PROPULSION**
Abstract: The purpose of this report is to acquaint the aerospace industry with problems in attaining electro-magnetic compatibility on gas turbine engines, particularly as used in aircraft. It is also the purpose of this report to present guidelines for the application of EMC controls to the engine, to its components which of necessity must operate in very hostile environments and to its interface with the aircraft.

Name: **AIR 1425 - METHODS OF ACHIEVING EMC ON GAS TURBINE ENGINES FOR SELF-PROPELLED LAND VEHICLES**
Abstract: Description of methods to be employed to achieve Electromagnetic Compatibility (EMC) of gas turbine engine accessories. Its primary objectives are to aid those system designers of gas turbine assemblies who are employing commercial accessories which are not always EMC designed, and to outline methods of achieving EMC employing readily available test instrumentation.

Name: **AIR 1500 - BIBLIOGRAPHY LOSSY FILTERS**
Abstract:

Name: **AIR 1509 - EMC ANTENNAS AND ANTENNA FACTORS; HOW TO USE THEM**
Abstract: Discusses the use and application of EMC antennas and antenna factors. The relationships between antenna gain, antenna factor, power density, and field strength are discussed. Illustrations of antennas and a list of manufacturers is also included.

Name: **ARP 935 - SUGGESTED EMI CONTROL PLAN OUTLINE**
Abstract: This outline was prepared for use as a guide in preparing Electromagnetic Interference (EMI) Control Plans. This outline may be abbreviated for small subsystems or expanded for complex aerospace systems.

Name: **ARP 936 - CAPACITOR, 10 MFD FOR EMI MEASUREMENTS**

Abstract: This recommended practice describes the requirements of a special purpose 10 mfd feed-through capacitor to be used in series with the power line to an electrical or electronic device during EMI tests.

Name: **ARP 937 - JET ENGINE ELECTROMAGNETIC INTERFERENCE TEST REQUIREMENTS AND TEST METHODS**

Abstract:

Name: **ARP 958 - BROADBAND ELECTROMAGNETIC INTERFERENCE MEASUREMENT OF ANTENNAS; STANDARD CALIBRATION REQUIREMENTS AND METHODS**

Abstract: This ARP outlines a standard method and technique for the checkout and calibration of broadband electro-magnetic interference measurement antennas. It covers conical logarithmic spiral antennas identified by the following USAF drawing numbers:
62J4040 200 to 1000 MHz
62J4041 1 to 10 GHz

Name: **ARP 1172 - FILTERS, CONVENTIONAL ELECTROMAGNETIC INTERFERENCE REDUCTION, GEN. SPEC.**

Abstract: This specification covers the general requirements for conventional AC and/or DC current carrying filter networks for the reduction of electromagnetic interference. A conventional filter is defined herein as a component containing definitive, lumped, R-L-C components and not employing distributed parameters as a required characteristic.

Name: **ARP 1173 - TEST PROCEDURES TO MEASURE R.F. SHIELDING CHARACTERISTICS OF EMI GASKETS**

Abstract: The purpose of this procedure is to establish a testing technique for measuring the RF shielding characteristic of EMI gasket metals with reliability and repeatability and establish standard terminology and fixed references.

Name: **ARP 1267 - ELECTROMAGNETIC INTERFERENCE MEASUREMENT IMPULSE GENERATORS; STANDARD CALIBRATION REQUIREMENTS AND TECHNIQUES**

Abstract: This ARP describes a standard method and means for measuring or calibrating the "Spectrum Amplitude" output of an impulse generator and also outlines the method for the measurement of EMI instruments impulse bandwidth.

Name: **ARP 1481 - CORROSION CONTROL AND ELECTRICAL CONDUCTIVITY IN ENCLOSURE DESIGN**

Abstract: Corrosion control is always of concern to the designer of electronic enclosures. The use of EMI gaskets to provide shielding often creates requirements that are in conflict with ideal corrosion control. This ARP presents a compatibility table which has a listing of metallic couples that are compatible from a corrosion aspect and which still maintain a low contact impedance.

Name: **ARP 1705 - COAXIAL TEST PROCEDURE TO MEASURE THE RF SHIELDING CHARACTERISTICS OF EMI GASKET MATERIALS**

Abstract: The purpose of this procedure is to establish a technique using conducted methods for reliably and repeatably measuring the RF shielding characteristics of EMI gasket materials and to establish standard terminology.

Name: **J551 - PERFORMANCE LEVELS AND METHODS OF MEASUREMENT OF ELECTROMAGNETIC RADIATION FROM VEHICLES AND DEVICES (20 - 1000 MHZ)**

Abstract: Covers the measurement of Impulse Electric Field Strength radiated over the frequency range of 20-1000 MHz from a vehicle or other device powered by an internal combustion engine or electric motor. All equipment normally operating when the engine is running is also included, except operator-controlled equipment, which is excluded. The recommended level applies only to complete vehicles or devices in their final manufactured form. Vehicle mounted rectifiers used for battery charging in electric vehicles is also covered.

Name: **J1113 - ELECTROMAGNETIC SUSCEPTIBILITY PROCEDURES FOR VEHICLE COMPONENTS (EXCEPT AIRCRAFT)**

Abstract: This SAE Recommended Practice establishes uniform laboratory measurement techniques for the determination of the susceptibility to undesired electro-magnetic sources of electrical, electronic, and electro- mechanical ground-vehicle components. It is intended as a guide toward standard practice but may be subject to frequent change to keep pace with experience and technical advances, and this should be kept in mind when considering its use.

Name: **J1211 - RECOMMENDED ENVIRONMENTAL PRACTICES FOR ELECTRONIC EQUIPMENT DESIGN**

Abstract: The climatic, dynamic, and electrical environments from natural and vehicle-induced sources that influence the performance and reliability of automotive electronic equipment are included. Test methods that can be used to simulate these environmental conditions are also included in this document.

Name: **J1338 - OPEN FIELD WHOLE VEHICLE SUSCEPTIBILITY STANDARD**

Abstract: This report covers the open field requirements for the determination of system susceptibility in the presence of an electric field in the frequency range 10kHz - 18GHz.

Name: **J1407 - VEHICLE ELECTROMAGNETIC RADIATION SUSCEPTIBILITY TESTING USING A LARGE TEM CELL**

Abstract: Covers the procedures for use and operation of a large transverse electromagnetic (TEM) mode cell for the determination of electromagnetic (EM) radiated susceptibility of equipment, subsystems, and systems (whose dimensions are less than 3 m X 6 m X 18 m) in the frequency range 10 kHz-20 MHz. Two cell designs and associated instrumentation are included for example purposes.

Name: **J1448 - ELECTROMAGNETIC SUSCEPTIBILITY MEASUREMENTS OF VEHICLE COMPONENTS USING TEM CELLS (14 KHz - 200 MHz)**

Abstract:

Name: **J1455 - RECOMMENDED ENVIRONMENTAL PRACTICES FOR ELECTRONIC EQUIPMENT DESIGN (HEAVY DUTY TRUCKS)**

Abstract:

Name: **J1816 OCT 1987 - PERFORMANCE LEVELS AND METHODS FO MEASUREMENT FO ELECTROMAGNETIC RADIATION FROM VEHICLES AND DEVICES NARROWBAND, 10KHz TO 1000 MHz**

Abstract: This SAE standard covers methods of measuring incidental narrowband radiation from vehicles and devices. The standard also establishes performance levels intended to protect nearby communication and broadcast receivers. It is intended to serve as an alternate method of measuring electromagnetic radiation which is analogous to the FCC Part 15 methodology but adapted to measuring vehicles. The equivalent procedures for broadband emissions are set forth in SAE J551. This standard covers narrowband emissions in the frequency range of 10 kHz to 1000 MHz. An example of such radiation is the unintended emission from on-board logic and computer modules. In particular, the standard is intended to provide protection to adjacent mobile communication and broadcast receivers (vertical E-Field test) and portable broadcast radios (magnetic field test). In the future horizontal E-Field measurement requirements will be considered.

SCIENTIFIC APPARATUS MAKERS ASSOCIATION (SAMA)

Name: **SAMA PMC 20.1 - PROCESS MEASUREMENT AND CONTROL TERMINOLOGY**
Abstract:

Name: **SAMA PMC 33.1 - ELECTROMAGNETIC SUSCEPTIBILITY OF PROCESS CONTROL INSTRUMENTATION**
Abstract: Voluntary Manufacturers Association whose standards for EMC are used within the Nuclear Industry. Test methods are defined in the standard for measuring the effect that electromagnetic radiation has on the instrument of concern. The test methods defined are structured for the primary objective of establishing repeatability of results at various test sites.

VERBAND DEUTSCHER ELEKTROTECNIKER (VDE)

Name: **VDE-0871/0875 - WEST GERMAN REGULATIONS FOR EMISSIONS FROM ELECTRONIC EQUIPMENT**
Abstract: Currently the strictest regulations in Europe and consequently the bench mark for European product specifications. VDE emission specs. are comparable to our FCC requirements though they are more severe and cover a wider frequency range. It is expected that CISPR will lean toward VDE in future sessions.

Name: **VDE-0871/6.78 - RADIO FREQUENCY INTERFERENCE SUPPRESSION OF RADIO FREQUENCY EQUIPMENT FOR INDUSTRIAL, SCIENTIFIC, AND MEDICAL (ISM) AND SIMILAR PURPOSES**
Abstract: This specification* applies to electrical equipment and installations that generate or utilize discrete frequencies or repetition frequencies above 10 kHz (high frequency equipment) which are not used for telecommunication purposes. It is not applicable to electrical equipment and installations that generate or utilize discrete frequencies or repetition frequencies up to 10 kHz. For this type of equipment DIN 57 875/VDE 0875 is applicable. For electrical equipment or systems that generate discrete and repetition frequencies both above and below 10 kHz, DIN 57 871/VDE 0871 and DIN 57 875/VDE 0875 are applicable as defined in the scope of each specification.

Name: **VDE-0875/6.77 - LIMITS FOR HOUSEHOLD EQUIPMENT**
Abstract:

Name: **VDE-0875/11.84 - RFI SUPPRESSION OF ELECTRICAL APPLIANCES AND SYSTEMS**
Abstract: This specification applies to electrical equipment and systems that generate narrowband interference with frequencies up to 10kHz, or broadband interference with frequencies above 10kHz. It covers emission limits, measurement methods, operation methods during measurements, and statistical evaluation of mass-produced equipment. Part 1 applies to household electrical equipment, hand-held electric tools, and semiconductor controls for controlling up to 16A of current. Part 2 applies to

lighting fixtures with discharge lamps. Part 3 applies to other electrical equipment and systems, especially semi conductor controls for controlling greater than 16A of current. This document is coordinated with CISPR Publication 14.

Name: **VDE-0876/9.78 - RFI MEASUREMENT EQUIPMENT**

Abstract: This document deals with specifications of measurement equipment, specifically RFI measuring sets, antennas, LISN's, voltage probes and quasipeak detectors. Preferred schematics are included in the document for the LISN, or "artificial mains network". Also discussed are hand-held LISN networks which require use of an "artificial hand" input. Detailed calibration of the quasipeak detector is given for use in all broadband noise measurements. Antenna selection is specified in accordance with CISPR, but at a variance with FCC rules. For devices under test using less than 25 Amps, a 150 ohm simulation resistance is specified for measuring broadband emissions.

Name: **VDE-0877/11.81 - HOW TO MEASURE RFI VOLTAGES**

Abstract: This document is divided into 3 parts:

1. Measurement procedure for measuring RFI voltages.
2. Procedure for measuring RFI field strength.
3. Specification of measurement of RFI power using the absorbing clamp.

The test setup including physical dimensions, grounding, use of line probe and LISN hook-up is described with some accompanying diagrams.

The magnetic field strength measurement set-ups are given for frequencies of 10kHz - 30 MHz and 30MHz - 1GHz, the latter being adapted from the work of ANSI C63 Committee on Open Area Test Sites. Physical set-up parameters are also given for field strength measurement. The movement of cables connected to the EUT is specified less stringently than the FCC specification, using much the same procedure otherwise.

MILITARY STANDARDS - DEPARTMENT OF DEFENSE (DOD)

Name: **MIL-A-17161 - ABSORBER, RADIO FREQUENCY RADIATION (MICROWAVE ABSORBING MATERIAL)**

Abstract: This specification covers the requirements for radio frequency (RF) radiation microwave absorbing material (RAM) absorber, hereinafter referred to as RAM.

Notes:This specification is approved for use by the Dept. of Navy, and is available for use by all Departments and agencies of the Department of Defense.

Classification: The RAM shall be of the following classes:

Class 1: Bulk sheets of RAM which are capable of being cemented to bulkheads or life rails and which are designed to attenuate signals normally striking the surface. These sheets are intended to have sufficient flexibility to permit their application to a variety of uses.

Class 2: RAM designed to be rigid and self-supporting for use as a fence or stand-alone barrier between an offending source and a sensitive receiver, to attenuate the offending signal.

Class 3: RAM custom manufactured to become part of a specific piece of equipment. For example, the base of an antenna filled with RAM to change the antenna sidelobe or the electrical properties of some material specifically designed for one piece of equipment.

Name: **MIL-B-5087 - BONDING, ELECTRICAL, AND LIGHTNING PROTECTION FOR AEROSPACE SYSTEMS**

Abstract: This specification covers the characteristics, application and testing of electrical bonding for aerospace systems, as well as bonding for the installation and interconnection of electrical and electronic equipment therein, and lightning protection.

Note: This specification has been approved by the Dept. of the Air Force and by the Bureau of Naval Weapons.

Name: **MIL-E-6051 - ELECTROMAGNETIC COMPATIBILITY REQUIREMENTS, SYSTEMS**

Abstract: This specification covers electromagnetic, environmental effects on systems including intra-system compatibility. This includes lightning, static, radiation hazards, bonding and grounding and others. This document assumes that all equipment and systems meet the applicable requirements of MIL-STD-461 and that test data is available for analysis.

Name: **MIL-T-83454/2 - TERMINALS, STUD, BLIND PLATE, FOR ELECTRICAL BONDING AND GROUNDING (NONINSULATED)**

Abstract: The complete requirements for procuring the stud terminals described herein shall consist of this document and the latest issue of specification MIL-T-83454.

Note: This specification sheet is approved for use by the Air Force Acquisition Logistics Division, Electronic Support Division, (AFALD/PTES), Wright-Patterson AFB, Ohio 45433,

Dept. of the Air Force, and is available for use by all Depts. and agencies of the Dept. of Defense.

Name: **MIL-STD-188/124 GROUNDING, BONDING AND SHIELDING FOR COMMON LONG HAUL/TACTICAL COMMUNICATIONS SYSTEMS INCLUDING GROUND BASED COMMUNICATIONS**

Abstract: This standard establishes the minimum basic requirements and goals for grounding, bonding and shielding of ground-based telecommunications C-E equipment installations, subsystems, and facilities including buildings and structures supporting tactical and long haul military communication systems.

Name: **MIL-STD-220 METHOD OF INSERTION LOSS MEASUREMENT**

Abstract: This standard covers a method of measuring, in a 50-ohm system, the insertion loss of feed-through suppression capacitors, and of single-and multiple-circuit, radio-frequency (RF) filters at frequencies up to 1,000 megacycles.

Note: The test methods in this standard are intended to provide data for quality control during quantity production of power line filters. The test conditions specified with 50 ohm input and output terminations are satisfactory for this purpose, but do not represent conditions that exist in actual circuits or installations. In general, there is little correlation between MIL-STD-220 quality control tests and the performance of a filter in a particular application. This is because power line filters are normally used under conditions where the power source and load impedances are independent of each other and can vary widely as a function of frequency. In addition, the power source impedance varies from line to line in general practice.

Name: **MIL-STD-285 - ATTENUATION MEASUREMENTS FOR ENCLOSURES, EM SHIELDING, FOR ELECTRONIC TEST PURPOSES, METHOD OF**

Abstract: This standard provides methods of measurement of magnetic, electric, and plane wave attenuations of a shielded room from 100 KHz to 10 GHz. Measurements are made at approximately 7 frequencies over this range. Tests are normally performed with the receiver and its associated antennas located within the enclosure.

Name: **MIL-STD-449 - RADIO FREQUENCY SPECTRUM CHARACTERISTICS, MEASUREMENT OF**

Abstract: Fundamental harmonic characteristics that go into ECAC database.

Name: **MIL-STD-461 - ELECTROMAGNETIC EMISSION AND SUSCEPTIBILITY REQUIREMENTS FOR THE CONTROL OF ELECTROMAGNETIC INTERFERENCE**

Abstract: This is the major EMC requirements document. It covers both conducted and radiated emission and susceptibility on power leads, control and signal leads, and overall equipments. The frequency ranges for various test methods are different, but the total frequency span is from 20 Hz to 40 GHz. MIL-HDBK-235 may be used for tailoring.

Name: **MIL-STD-462 - ELECTROMAGNETIC EMISSION AND SUSCEPTIBILITY, TEST METHODS FOR**

Abstract: This standard is a companion document to MIL-STD-461. It provides test methods and procedures required to verify compliance with MIL-STD-461.

Name: **MIL-STD-463 - DEFINITIONS AND SYSTEM OF UNITS, ELECTROMAGNETIC INTERFERENCE AND ELECTROMAGNETIC COMPATIBILITY**

Abstract: This standard is a companion to MIL-STD-461 and 462. It contains terms, definitions and system of units used in MIL-STD-461 and MIL-STD-462.ZL

Name: **MIL-STD-469 - RADAR ENGINEERING DESIGN REQUIREMENTS, ELECTROMAGNETIC COMPATIBILITY**

Abstract: The engineering design requirements set forth herein are established to control the spectral characteristics of all new radar systems operating between 100 and 40,000 MHz in an effort to achieve electromagnetic compatibility and to conserve their frequency spectrum available to Military radar systems.

Name: **MIL-STD-480 - CONFIGURATION CONTROL - ENGINEERING CHANGES, DEVIATIONS AND WAIVERS**

Abstract: This standard provides:

a. Requirements for maintaining configuration control of configuration items.
b. Requirements for the preparation and submission of proposed engineering changes, deviations, waivers and notices of revision (NORs).
c. Requirements for submitting the technical, fiscal and logistic supporting information necessary to define the impact of a proposed engineering change.
d. Instructions for submitting the information necessary to maintain the configuration identification in a current status.

Name: **MIL-STD-1275 - CHARACTERISTICS OF 28 VOLT DC ELECTRICAL SYSTEMS IN MILITARY VEHICLES**

Abstract: The purpose of this document is to provide for compatibility between vehicular electric power supply and utilization equipment by confining electric power characteristics within definitive limits and restricting the requirements imposed on the electric power by the utilization equipment. This standard prescribes the limits of transient voltage characteristics and steady state limits of the 28 volt DC electric power circuits of Military vehicles.

Name: **MIL-STD-1310 SHIPBOARD BONDING, GROUNDING AND OTHER TECHNIQUES FOR ELECTROMAGNETIC COMPATIBILITY AND SAFETY**

Abstract: This standard sets forth methods for shipboard bonding, grounding, and the utilization of non-metallic materials for the purpose of electromagnetic interference (EMI) reduction and the protection of personnel from electrical shock. In addition, methods for the installation of shipboard ground systems are also provided.

Notes: Bonding classes shall be of the following classes:

Class A: A bond achieved by joining two metallic items or surfaces through the process of welding or brazing. Bonding block installations are also considered class "A" bonds.

Class B: A bond inherent in the installation of an item or equipment by mounting hardware and other areas of metal-to-metal contact.

Class C: A bond achieved by bridging two metallic surfaces with a metallic bond strap or ground wire.

Name: **MIL-STD-1377 - EFFECTIVENESS OF CABLE, CONNECTOR AND WEAPON ENCLOSURE SHIELDING AND FILTERS IN PRECLUDING HAZARDS OF ELECTROMAGNETIC RADIATION TO ORDANCE, MEASUREMENT OF**

Abstract:

Name: **MIL-STD-1385 - PRECLUSION OF ORDANCE HAZARDS IN ELECTROMAGNETIC FIELDS, GENERAL REQUIREMENTS FOR**

Abstract: This standard establishes the general requirements to preclude hazards resulting from ordnance having electro-explosive devices when exposed to electro magnetic fields. The nominal frequency range covered by this standard is from 10 kHz to 40 GHz

Notes: TABLE 1 - ELECTROMAGNETIC ENVIRONMENT LEVELS

Frequency (MHz)	Field Intensity Volts (RMS/Meter)	Avg. Power Density Mw per Sq. Cm
Communications		
0.025 - 0.535	300	
2 - 32	100	
100 - 156		0.01
225 - 400		0.01
Radars/Other Electronic Equipment		
200 - 225	20	
400 - 850	15	
850 - 950	55	
950 - 1400	10	
2700 - 3600	200	
5400 - 6000	400	
7000 - 7900	30	
7900 - 8400	175	
8400 - 11000	400	
11000 - 13000	30	
13000 - 16000	90	
33000 - 40000	4	

* These intensities apply to the smaller of the following field components:
  a. The vertical component of the electric field (E).
  b. The directional maximum component of the horizontal magnetic field in ampere turns/meter (H), multiplied by 377 ohms.

Name: **MIL-STD-1512 -ELECTRO-EXPLOSIVE SUBSYSTEMS, ELECTRICALLY INITIATED, TEST METHODS AND DESIGN REQUIREMENTS**

Abstract:

Name: **MIL-STD-1541 - ELECTROMAGNETIC COMPATIBILITY REQUIREMENTS FOR SPACE SYSTEMS**

Abstract: This standard establishes the electromagnetic compatibility (EMC) requirements for space systems, including launch vehicles, space vehicles, ground systems, and associated aerospace ground equipment (AGE). It does not apply to facilities which house such items.

Name: **MIL-STD-1542 - ELECTROMAGNETIC COMPATIBILITY AND GROUNDING REQUIREMENTS FOR SPACE SYSTEM FACILITIES**

Abstract:

Name: **MIL-STD-1605 - PROCEDURES FOR CONDUCTING A SHIPBOARD ELECTROMAGNETIC INTERFERENCE (EMI) SURVEY (SURFACE SHIPS)**

Abstract: This standard provides detailed procedures for conducting an electromagnetic interference (EMI) survey aboard surface ships. An EMI survey is required for new construction ships and ships receiving overhauls or other major repair work that changes the electromagnetic configuration. Note: Personnel safety. The safety precautions and operating procedures of Publications 0900-005-8000 and 0900-317-7010 relating to radio-frequency radiation hazards and radio-frequency burn hazards shall be observed while electronic antennas are energized.

Name: **MIL-STD-1757 - LIGHTNING QUALIFICATION TEST TECHNIQUES FOR AREOSPACE VEHICLES AND HARDWARE**

Abstract: This document presents a set of standard test waveforms and techniques for lightning qualification testing of aerospace vehicles and hardware. The test waveforms presented in this document are intended to reproduce the significant effects of the natural environment and are therefore independent of vehicle type or configuration. The tests include high voltage and high current physical damage tests of fuel, structural and electrical hardware, as well as indirect effects associated with lightning strikes to externally mounted electrical hardware. Note: This document does not include design criteria nor does it specify which items should or should not be tested. The document is written so that test environments can be tailored for each specific program as dictated by the vehicle design, performance and mission constraints. Acceptable levels of damage and pass-fail criteria for the tests described herein shall be established and agreed upon by the procuring agency, regulatory authority, and aerospace vehicle manufacturer.

Name: **MIL-STD-1857 - GROUNDING, BONDING AND SHIELDING DESIGN PRACTICES**

Abstract: This standard covers the characteristics of grounding, bonding, and shielding design practices to be applied in the construction and installation of marine, fixed station, transportable, and ground mobile electronic equipment, subsystem and system.

MILITARY HANDBOOKS - DEPARTMENT OF DEFENSE (DOD)

Name: **MIL-HDBK-235 - ELECTROMAGNETIC (RADIATED) ENVIRONMENT CONSIDERATIONS FOR DESIGN AND PROCUREMENT OF ELECTRICAL AND ELECTRONIC EQUIPMENT, SUBSYSTEMS, AND SYSTEMS**

Abstract: MIL-HDBK-235 is a three part document. Part 1 is unclassified and contains information on the development of performance requirements for equipment and systems exposed to the radiation levels described in Parts 2 and 3. Parts 2 and 3 are classified documents and contain information on radiation from friendly and own force emitters and from hostile emitters respectively. MIL-STD-461 requires that radiated susceptibility levels be tailored using the information provided in MIL-HDBK-235.

Name: **MIL-HDBK-237 PART 1 - ELECTROMAGNETIC COMPATIBILITY MANAGEMENT GUIDE FOR PLATFORMS, SYSTEMS AND EQUIPMENT**

Abstract: This is a relatively new document receiving heavy emphasis by DOD. It is a must document for managers and key people early in the development program. It provides guidance for the electromagnetic interference (EMI) control process such as EMC Control Plan (EMCCP).

Name: **MIL-HDBK-238 - ELECTROMAGNETIC RADIATION HAZARDS**

Abstract:

Name: **MIL-HDBK-241 - DESIGN GUIDE FOR ELECTRO MAGNETIC INTERFERENCE REDUCTION IN POWER SUPPLIES**

Abstract: This handbook offers guidance to power supply designers in techniques which have been found effective in reducing conducted and radiated interference generated by power supplies. It is a compilation of information from library sources, pertinent military laboratory programs including contracts to universities and industry, and practical fixes derived from the experience of engineers.

Notes: Switching mode power supplies have characteristics such as high output per unit volume and high efficiency, and as a result, their use is increasing. If improperly designed, they create electromagnetic interference (EMI) that can degrade other systems. A major shortcoming of switching-regulator technology is that it is a complex technology that appears to be simpler than it actually is. Because of this apparent simplicity, misjudgments are prevalent in the design and application of switching-mode power supplies by the uninitiated engineer. In the past few years, the inherent advantages of switching-mode technology for power supplies have spurred advances in component design (to limit the noise sources) and design techniques (to curtail noise coupling to the outside world). The result is much less EMI.

Application of EMI reduction techniques cannot be done indiscriminately. Switching-mode power supplies are constant power devices and exhibit a negative input resistance. Improper design of filters can cause degradation of power supply parameters and even turn the whole power system into an oscillator. This handbook provides criteria for proper filter design in addition to providing pertinent EMI reduction techniques.

This design guide responds to a need common to many small businesses. They are often at a disadvantage in electromagnetic compatibility (EMC) design since budgetary restrictions preclude employing a full-time designated electromagnetic interference (EMI)/EMC engineer. This text is a compilation of EMI reduction design principles to assist those companies.

Name: **MIL-HDBK-253 - GUIDANCE FOR THE DESIGN AND TEST OF SYSTEMS PROTECTED AGAINST THE EFFECTS OF ELECTROMAGNETIC ENERGY**

Abstract: The purpose of this document is to provide program managers with guidance for the design and test of electronic systems which are immune to the detrimental effects of electromagnetic energy.

Notes: MIL-HDBK-235 - Electromagnetic environmental data is currently available in MIL-HDBK-235. This document contains representative maximum values of electromagnetic environmental data (friendly and hostile) in terms of peak and average field strengths and power densities that could be encountered.

Applicability: This handbook is applicable to any electronic system or equipment which may be exposed to electromagnetic energy during its life cycle, including the following:

a. Aerospace and weapons systems and associated subsystems
b. Ordinance
c. Support and checkout equipments for A and B

Name: **MIL-HDBK-335 - MANAGEMENT AND DESIGN GUIDANCE ELECTROMAGNETIC RADIATION HARDNESS FOR AIR LAUNCHED ORDANCE SYSTEMS**

Abstract:

Name: **MIL-HDBK-419 - GROUNDING, BONDING AND SHIELDING FOR ELECTRONIC EQUIPMENT AND FACILITIES**

Abstract: This handbook addresses the practical considerations for engineering of grounding systems, subsystems, and other components of ground networks. Electrical noise reduction is discussed as it relates to the proper installation of ground systems. Power distribution systems are covered to the degree necessary to understand the interrelationships between grounding, power distribution, and electrical noise reduction.

The information provided in this handbook primarily concerns grounding, bonding, and shielding of fixed plant telecommunications-electronics facilities; however, it also provides basic guidance in the grounding of deployed transportable communications/electronics equipment.

Note: Both volumes (Volume 1, Basic Theory and Volume II, Applications) implement the Grounding, bonding and shielding requirements of MIL-STD-188/124 which is mandatory for use within the Department of Defense. The purpose of this standard is to ensure the optimum performance of ground-based tele-communication C-Equipment by reducing noise and providing adequate protection against power system faults and lightning strikes.

OTHER MILITARY PUBLICATIONS

AIR FORCE STANDARDS

Name: **AIR-STD-12/19 - ELECTROMAGNETIC COMPATIBILITY TEST METHODS FOR AIRCRAFT ELECTRICAL AND ELECTRONIC EQUIPMENT**
Abstract:

Name: **AIR-STD-20/16 - DESIGN GUIDE TO PRECLUDE HAZARDS OF ELECTRO-MAGNETIC RADIATION TO AIRBORNE WEAPON SYSTEMS**
Abstract:

AIR FORCE SYSTEMS COMMAND (AFSC)

Name: **AFSC DH 1-4 - ELECTROMAGNETIC COMPATIBILITY**
Abstract: This handbook provides system designers with Electro- magnetic Compatibility design principles, information, guidance and criteria; and establishes a central source of electromagnetic compatibility design data (any type of factual information that can be used as a basis for design decisions).

Name: **AFSC DH 2-7 - AIR FORCE SYSTEMS COMMAND DESIGN HANDBOOK, SYSTEM SURVIVABILITY**
Abstract:

Name: **AFSCM 500-6 - EMP EFFECTS ON AIR FORCE SYSTEMS**
Abstract:

Name: **AMC PAMPHLET 706-23 - HARDENING WEAPON SYSTEMS AGAINST RF ENERGY**
Abstract:

Name: **AMC PAMPHLET 706-410 - ENGINEERING DESIGN HANDBOOK, EMC**
Source:
Abstract:

Name: **DNA 2114H-1 - EMP HANDBOOK, DESIGN PRINCIPLES**
Source:
Abstract:

Name: **DNA 2114H-2 - EMP HANDBOOK, COUPLING ANALYSIS**
Source:
Abstract:

Name: **DNA 2114H-3 - EMP HANDBOOK, COMPONENT RESPONSE AND TEST METHODS**
Source:
Abstract:

Name: **DNA 2114H-4 - EMP HANDBOOK, ENVIRONMENT AND APPLICATIONS**
Source:
Abstract:

Name: **DNA 3286-H - EMP PREFERRED TEST PROCEDURES**
Source:
Abstract:

Name: **DARCOM P706-410 - ENGINEERING DESIGN HANDBOOK, ELECTROMAGNETIC COMPATIBILITY**
Source:
Abstract: This volume contains discussions of electromagnetic field coupling mechanizing, nonlinear circuit effects and statistical considerations along with most of the equations used to derive its data.

NASA PUBLICATIONS

Name: **NASA SP-3067 - RADIO FREQUENCY INTERFERENCE HANDBOOK**
Source:
Abstract:

NAVAL PUBLICATIONS

Name: **NAVAIR AD 1115 - ELECTROMAGNETIC COMPATIBILITY DESIGN GUIDE FOR AVIONICS AND RELATED GROUND SUPPORT EQUIPMENT**
Source:
Abstract:

Name: **NAVAIR AR-29 - FREQUENCY ALLOCATION AND EQUIPMENT SPECTRUM SIGNATURE, REQUIREMENTS FOR**
Source:
Abstract:

Name: **NAVAIR AR-43 - ELECTROMAGNETIC COMPATIBILITY ADVISORY BOARD REQUIREMENTS FOR**
Source:
Abstract:

Name: **NAVAIR AR-46 - AERONAUTICAL REQUIREMENTS, HERO, REQUIREMENTS FOR HERO TESTS, ANALYSES AND DOCUMENTATION**
Source:
Abstract:

Name: **NAVAIR 16-1-529 - VOL. 2, PART 1, TECHNICAL MANUAL, ELECTROMAGNETIC RADIATION HAZARDS (HAZARDS TO ORDNANCE)**
Source:
Abstract:

Name: **NAVAIR 5335 - ELECTROMAGNETIC COMPATIBILITY MANUAL**
Source:
Abstract:

Name: **NAVELEX 0101,106 - NAVAL SHORE ELECTRONICS CRITERIA, EMC/EMR HAZARDS**
Source:
Abstract:

Name: **NAVALEX 0967-LP-624-6010 - VOL.1, TECHNICAL MANUAL, ELECTRO MAGNETIC RADIATION HAZARDS (HAZARDS TO PERSONNEL, FUEL AND OTHER FLAMMABLE MATERIALS**
Source:
Abstract:

Name: **NAVSEA OD 30393 - DESIGN PRINCIPLES AND PRACTICES FOR CONTROLLING HAZARDS OF ELECTROMAGNETIC RADIATION TO ORDNANCE**
Source:
Abstract:

Name: **NAVSEA OP-3565 - VOL.2, PART 2, TECHNICAL MANUAL, ELECTROMAGNETIC RADIATION HAZARDS (HAZARDS TO ORDNANCE)**
Source:
Abstract:

Name: **NAVSEA 0900-LP-058-3010 SHIPBOARD INSTALLATION PRACTICES FOR ELECTRO-MAGNETIC PULSE VULNERABILITY REDUCTION**
Source:
Abstract:

Name: **NAVSEA 0967-033-0000 - HANDBOOK OF SUBMARINE VLF SYSTEM PERFORMANCE MEASUREMENTS FOR EM INTERFERENCE**
Source:
Abstract:

Name: **NAVSEA 0967-LP-000-0150 - ELECTRONIC INSTALLATION AND MAINTENANCE BOOK, ELECTRO-MAGNETIC INTERFERENCE REDUCTION**
Source:
Abstract:

Name: **NAVSEA 0967-LP-266-1010 - R.F. COMPATIBILITY AND ELECTROMAGNETIC INTERFERENCE REDUCTION TECHNIQUES FOR FORCES AFLOAT**
Source:
Abstract:

Name: **NAVSEA 0967-LP-283-5010 - SHIPBOARD ELECTRO-MAGNETIC SHIELDING PRACTICES**
Source:
Abstract:

Name: **NAVSEA 0967-LP-316-3010 - INSTRUCTION MANUAL FOR MICROWAVE RADIATION PROTECTIVE CLOTHING**
Source:
Abstract:

Name: **NAVSEA 0967-LP-624-6010 - ELECTROMAGNETIC RADIATION HAZARDS (HAZARDS TO PERSONNEL, FUEL, AND OTHER FLAMMABLE MATERIAL)**
Source:
Abstract:

Name: **NAVSEA S9407-AB-HBK-010 - HANDBOOK OF SHIPBOARD ELECTROMAGNETIC SHIELDING PRACTICES**
Source:
Abstract:

NORTH ATLANTIC TREATY ORGANIZATION (NATO)

Name: **NATO STANAGS 2083 - COMMANDER'S GUIDE ON RADIATION EXPOSURE**
Abstract:

Name: **NATO STANAGS 3516 - EMC TEST METHODS FOR AEROSPACE ELECTRICAL AND ELECTRONIC EQUIPMENT**
Abstract:

Name: **NATO STANAGS 3614 - EMC OF INSTALLED EQUIPMENT IN AIRCRAFT**
Abstract:

Name: **NATO STANAGS 3659 - BONDING AND IN-FLIGHT LIGHTNING**
Abstract:

Name: **NTIA MANUAL - MANUAL OF REGULATIONS AND PROCEDURES FOR RADIO FREQUENCY MANAGEMENT**
Source:
Abstract:

CONTACTS FOR INFORMATION ON EMC STANDARDS

ANSI	Ed Bronaugh, Electrometrics Co., Austin, TX.
CISPR	Ralph Showers, University of Pennsylvania
FCC	Art Wall
	Julius Knapp
Gov. Stds.	(see listing published in ITEM magazine)
HUD	Bernie Manhaimer
IEEE	Donald Heirman, Bell Labs
SAE	
(Aerospace)	Duwayne Awerkamp,
	Motorola, Scottsdale, AZ
J551	Frederick Bauer,
	Ford Motor Co. (Retired)
J1113	Myron Crawford,
	National Institute of Standards & Technology
VDE	Herb Martel, Emaco Co.

BOOKS ON EMC

Analysis of Linear Circuits, C.R. Paul, McGraw-Hill, NY, 1989.

Controlling Conducted Emissions by Design, J.C. Fluke, Van Nostrand Reinhold, 1991.

Coupling of External Electromagnetic Fields to Transmission Lines, A.A. Smith, Jr. John Wiley & Sons, 1977.

Coupling to Shielded Cables, E.F. Vance, John Wiley & Sons, 1978.

Decoupling and Layout of Digital Printed Circuits, K.R. Keenan, The Keenan Corp. 1985.

Digital Design for Interference Specifications, R.K. Keenan, The Keenan Corporation, 1983.

Electromagnetic Compatibility, J.J. Goedbloed, Kluwer, Deventer, The Netherlands, 2nd Ed. 1991 (in Dutch), to be published in English by Prentice Hall (1992).

Electromagnetic Compatibility Design Guide, E.R. Freeman and M. Sachs, Artech House, 1982.

Electromagnetic Compatibility Handbook, N. Violette, D.R.J. White, and M. Violette, Van Nostrand Reinhold, NY 1987.

Electrostatic Discharge and Electronic Equipment: A Practical Guide for Designing to Prevent ESD Problems, Warren Boxleitner, IEEE Press, 1989.

Electronic System Design: Interference and Noise Control Techniques, J.R. Barnes, Prentice-Hall, 1987.

Electrostatic Discharge: Understand, Stimulate, and Fix ESD Problems, Interference Control Technologies, 1986.

Grounding and Shielding in Facilities, R. Morrison and W.H. Lewis, John Wiley and Sons, 1990.

Grounding and Shielding Techniques in Instrumentation, R. Morrison, Third Edition, John Wiley and Sons, 1986.

Introduction to Electromagnetic Compatibility, C.R. Paul, John Wiley Interscience, NY, 1992.

Introduction to Electromagnetic Fields, second edition, C.R. Paul and S.A. Nasar, McGraw-Hill, NY 1987.

Noise Reduction Techniques in Electronic Systems, second edition, H.W. Ott, John Wiley Interscience, NY, 1988.

Lightning, M.A. Uman, Dover Publications, 1984.

Lightning and Lightning Protection, W.C. Hart and E.W. Malone, Done White Consultants, 1985.

Lightning Protection, Chemical Publishing Co., R.H. Golde, 1973.

Power Line Filter Design for Switched-Mode Power Supplies, M.J. Nave, Van Nostrand Reinhold, 1991.

Principles of Electromagnetic Compatibility, third edition, B. Keiser, Artech House, 1987.

Twelve (12) Volume Set of EMC Guidance Books
Source: Interference Control Technologies, Inc.

Name: VOLUME 1 - Fundamentals of Electromagnetic Compatibility
Abstract: This introductory text is an overview of the EMC field and explains principles upon which later volumes elaborate. Early chapters provide EMC terms and definitions a definitions and illustrate basic EMI problems and solutions. Subsequent chapters cover EMC in telecommunication and other electronic systems, principles of grounding and bonding, shielding, filter applications, standards and rules and regulations. Information on EMI control and test plans and measurement procedures is also covered.

Name: VOLUME 2 - Grounding and Bonding
Abstract: This volume clarifies the differences between earth grounds, safety green-wire connections, zer-volt analog and logic references and concepts that fall under the grounding umbrella. Safety versus fault detection and correction issues are addressed, along with the principles of and rationale for power grounding, ground-related EMI, cable shield grounding and test and maintenance procedures. Bonding techniques are explored, including welding, brazing, soldering, screw-type fasteners, corrosion control and more.

Name: VOLUME 3 - Electromagnetic Shielding
Abstract: This is a guide to EMI shielding materials and procedures from small enclosures to buildings and vehicles. It begins with shielding theory, wave impedance, metal

impedance and shielding effectiveness (SE). Information on achieving skin shields by conductive paint, spraying, dipping, deposition an composites are presented. Also covered are methods for determining SE requirements, SE of box structures, evaluation and control of aperture leakages and shielding design and retrofit.

Name: VOLUME 4 - Filter and Power Conditioning
Abstract: Filter and isolation transformer tools for eliminating conducted EMI are covered. Related suppression techniques are examined, including filter-pin connectors, planar-capacitive ferrite beads and lossy lines. The book examines distribution systems, types of noise, line regulators, transient suppressors, inverters and uninterruptible power supplies. Communications and wave filters are discussed at length, emphasizing filter types (matched adaptive, classical and modern types; low-pass, highpass, bandpass, band-rejection), their construction and application.

Name: VOLUME 5 - EMC in Components and Devices
Abstract: A good design for EMC begins at the component level. Material covers EMC performance of components and essential EMI mechanisms. The book discusses EMC characteristics of resistors, capacitors and inductors, insulators and conductors, analog and logic devices, power electric components, transformers, solenoids, relays and other magnetic components, electromechanical and luminescent devices, transient suppressors and optoelectronics. Information is also provided on PCB layout techniques, backplanes and motherboards and design for ESD tolerance.

Name: VOLUME 6 - EMI Test Methodology and Procedures
Abstract: The only way to prove that your design for MEC works is to test the final product, and Volume 6 tells you how to do it. The rationale and administration of EMI emissions and susceptibility testings is presented in depth. Test instruments and conducted and field transducers are examined, along with automated EMI testing. Also covered are test sites and enclosures, typical test errors and their elimination, test plans and reports, etc. Special emphasis is place on military standards and commercial regulations per FCC, CISPR, IEEE, SAE and many other regulatory interests.

Name: VOLUME 7 - EMC in Telecommunications
Abstract: Interference in baseband and carrier band telecommunication systems may be forecasted and analyzed to determine if it meets user objectives. following an introduction to telecommunication system EMC, this book presents a comprehensive analysis of transmitter, receiver and antenna EMC considerations, propagation paths and modes, and performance models for EMC assessment. EMI control methods are discussed, and a survey of EMC analysis computer software is included.

Name: VOLUME 8 - EMI Control Methodology and Procedures
Abstract: This volume provides the user with an organized approach to EMI problem diagnosis and solution in both design and retrofit applications. The material covers electromagnetic ambients, analog and logic victims, radiated and conducted coupling modes and EMI emission and susceptibility control techniques. Also covered are common-and differential-mode coupling, ground-loop coupling, cable-to-cable coupling, common-impedance coupling, power mains coupling and related control methods.

Name: VOLUME 9 - Commercial EMC Standards of the United States
Abstract: A compendium of FCCm SAE AIRS and ARPs, EPA SARs and other commercial USA EMI-related regulations and standards. The most commonly used documents for legal compliance and test evaluation are reproduced. Other applicable regulations are excerpted or outlined. Introductory material lays the groundwork for each regulation or standard, and an extensive bibliography refers the reader to further sources of information. This volume will save the time otherwise required to obtain and review over 20 documents.

Name: VOLUME 10 - International Commercial EMC Standards
Abstract: A book for those who must comply with CISPR, VDE and other non USA commercial regulations. The format is similar to Volume 9 and includes those crucial standards needed to compete in the European Market. The adoption of the CISPR standards by the international community (1992 EEC directives) was foreseen and included. Each regulation is presented with a corresponding overview and salient comment. All documents are presented in English.

Name; VOLUME 11 - Principal Military EMC Standards of the United States
Abstract: USA military standards are reproduced in this hard bound volume. Explanatory text familiarizes the reader with the importance and applicability of these standards. The book includes the major intersystem and intrasystem standards, MIL-STD-220A, MIL-STD-285, MIL-STD-461C, MIL-STD-462, MIL-STD-463A, MIL-STD-704D, MIL-STD-831, and MIL-STD-45662.

Name: VOLUME 12 - Supporting and Unique Military EMC Standards of the United States
Abstract; Organized similarly to Volume 11, this book provides information on and reproductions of supporting military standards relating to connectors, cables, filters, etc. Specific MIL standards and specifications include: MIL-E-5400T, MIL-C-13909C, MIL-F-15733F, MIL-C-26482G, MIL-STD-1377, MIL-STD-1385A, MIL-STD1399B, MIL-STD-1512, MIL-C-85485A, MIL-C-83723D, MIL-C-24308B, and many others.

PERIODICALS, NEWSLETTERS, REPORTS

Name: **COMPLIANCE ENGINEERING**
Source: Dash, Straus and Goodhue, Inc.

Abstract: A composite annual publication containing information types of articles related to EMC. Articles are varied in content: technical items, historical EMC information, reviews and opinions of EMC specifications (staff translations of international or foreign specifications), buyer's guide and commercial advertising.

Name: **INTERFERENCE TECHNOLOGY ENGINEERS' MASTER (ITEM) MAGAZINE, DIRECTORY AND DESIGN GUIDE FOR THE CONTROL OF EMI**
Source: R & B Enterprises Div. of Robar Industries, Inc.
Abstract:

Name: **IEEE ELECTROMAGNETIC COMPATIBILITY SOCIETY NEWSLETTER**
Source: Institute of Electrical and Electronic Engineers (IEEE)
Abstract:

Name: **EMC TECHNOLOGY MAGAZINE**
Source: Don White Consultants, Inc.
Abstract:

Name: **ELECTROMAGNETIC NEWS REPORT**
Source: R & B Enterprises Div. of Robar Industries, Inc.
Abstract: Latest news and products, newest techniques and activity reports on FCC, IEEE, CISPR, DOD, VDE, etc.

Name: **FCC NEWS REPORT**
Source: R & B Enterprises Div. of Robar Industries, Inc.
Abstract: In-depth coverage of both the FCC and Computer Panel activities relative to computing devices and ISM.

GLOSSARIES

(See MIL-STD-463 and IEEE Std. 100)

SOCIETIES

IEEE ELECTROMAGNETIC COMPATIBILITY SOCIETY

Institute of Electrical and Electronic Engineers (IEEE) The Electromagnetic Compatibility (EMC) Society of the IEEE was founded over thirty years ago. Its membership consists of professionals committed to the design, integration, testing, and analysis of systems and individual devices for radiated and conducted electromagnetic interference.

The Institute of Electrical and Electronics Engineers (IEEE), the worlds largest engineering society with over 300,000 members has its roots dating back to over 100 years. In 1884 the American Institute of Electrical Engineers (AIEE) was founded. In 1912 the Institute of Radio

Engineers (IRE) was founded. In 1963 the AIEE and the IRE merged to form the IEEE. The directive to teh IEEE was to enhance the quality of life for all people throughout the world through the application of technology in it's fields of competence. The EMC Society is one of 33 constituent societies of the IEEE.

The EMC Society strives for the enhancement of Electromagnetic Compatibility through the generation of; engineering standards, measurement techniques and test procedures, measuring instruments, equipment and systems characteristics, improved techniques and components, education in EMC and studies of the origins of interference. Electromagnetic Compatibility enhancement is defined as the "Field of Interest" of the Society.

The EMC Society's objectives are scientific, literary, educational, and professional in character. The Society strives for the advancement of the theory and practice of electrical and electronic engineering and of the allied arts and sciences, and the maintenance/advancement of the high professional standing among its members and affiliates.

The Society promotes close cooperation and exchange of technical informaiton among its members and other professional societies. To facilitate the exchange, local chapter and yearly international symposium meetings are held for the presentation of papers.

Membership in the EMC Society is open to members of the IEEE in any grade, includingstudents, having professional interest in any phase of the field of interest of Electromagnetic Compatibility Engineering.

Electronic Industries Association (EIA)

This diverse association covers the complete electronic industry which includes manufactuers and distributors. Founded in 1924 after being named "Radio Manufacturers Association" its goals include technical progress, national defense economic growth, and participation in teh interests of teh electronic industry. The name "Electronic Industries Association" was adopted in 1957. The main function of the organization is to produce standards which are nbormally cerified by ANSI at the request of the EIA.

An EMC Committee, known as G-46, was born to establish a user/industry stand on Government specifications, regulations and standards. The EIA generally reviews and comments on proposed government specifications and standards before they are released.

G-46 activities include spectrum management and conservation, personnel safety and health care electronics design and usage, and isntallation in terms of regulated and non-regulated electromagnetic emissions and receptions. This EIA Committee also assures that EMC legislation, regulations, specifications, standards, requirements and evaluation procedures are acceptable for procurement and application. When necessary, the EIA provides support to other organizations. A key task is the coordination and promulgation of information. More details can be obtained from:

EIA
2001 Eye Street, N. W.
Washington, DC 20006

legislation, regulations, specifications, standards, requirements and evaluation procedures are acceptable for procurement and application. When necessary, the EIA provides support to other organizations. A key task is the coordination and promulgation of information. More details can be obtained from:

EIA
2001 Eye Street, N. W.
Washington, DC 20006

Telecommunications Industries Association

This association is a spin-off from the EIA. It is made up of the telecommunications division previously part of the EIA and the USTS (United States Telephone Suppliers). Known as the TIA, this organization is totally independent from the EIA, even though they still share the same facilities. For more information, contact:

TIA
2001 Eye Street N.W.
Washington, DC 20006

Institute of Electrical and Electronic Engineers

This professional society, with over 250,000 members, has various societies such as the EMC Society which boasts a membership of 2,5000. The main function of the society is to promote technical advancement through educational programs and the distribution of information.

The EMC Society has 28 local chapters located in major cities in the United States; Ottawa, Canada; Tel Aviv, Israel; and Tokyo, Japan. The society is active in technical conferences and symposia through its sponsorship of the Electromagnetic Compatibility Symposium and participation in various local and international conferences and symposia. An inter-society relations committee organizes special sessions and secures invited papers for other conferences that have an EMC interest. Further details are available from:

IEEE
345 E. 47th Street
New York, NY 10017

Society of Automotive Engineers

The Society of Automotive Engineers is a professional society dedicated to a wide spectrum of engineers in the aerospace and automobile fields. The EMC elements are handled by SAE Committee AE-4 which is composed of technically qualified members, liaison members and consultants who are responsible for coordination and advising on electromagnetic compatibility. It provides assistance to the technical community through standardization, design improvements and testing methodology. Also, it maintains a technical forum for the

resolution of mutual problems. Engineering standards, specifications and technical reports are developed by the committee and issued by teh society for the general information of industry and governments worldwide.

The organization is made up of about 400 independent commercial labs. Approximately 10 of these labs perform EMI and telecommunications testing. The organization acts as a voice on legislation for EMC related issues (e.g. MIL-STD) for these trade organizations. It does not, however, set standards. This council was the first organization to petition the National Bureau of Standards to set up the NBs National Voluntary Laboratory Accreditation Program (NVLAP). Current activities include representing the United States in the recent European hearings for achieving standardized testing before the 1992 lift on trade barriers. Further information can be obtained from:

ACIL
1752 K Street, N.W.
Washington, DC 20006

EOS/ESD Association

EOS/ESD is an acronym for Electrical Overstress/Electrostatic Discharge. The primary field of interest of this organization is the advancement of the theory and practice of electrical overstress avoidance on electrostatic discharge phenomena. The technical focus includes considerations to the effects of both material and manmade electromagnetic threats (ESD, EMI EMP, Lightning, etc.) on electronic components, subsystems, and systems. The technical community includes personnel in government, industry and academic organiztions involved in research and development, electronic equipment manufacturers and user, and EOS/ESD effects reduction program products and methods. Further information can be received by writing:

EOS/ESD Association
P.O. Box 298
Westmorland, NY 13490

Electromagnetic Energy Policy Alliance

The Electromagnetic Energy Policy Alliance (EEPA) is an association of manufacturers and users of electronic and electrical systems that utilize non-ionizing electromagnetic energy in telecommunications, broadcasting, manufacturing and consumer services. The primary objective of the alliance is to work for a responsible and rational public policy regarding electromagnetic energy. EEPA actively promotes public education, sponsors research and acts in an advisory capacity to regulatory and standard-setting bodies. Information can be obtained from:

Richard Ekfelt
EEPA
1255 23rd Street, N.W.
Washington, DC 20037

American National Standards Institute

The American National Standards Institute, ANSI, basically participates in coordination standards. Among the EMC related committees that are part of ANSI are the C63 and C95.1.

The C63 Ad Hoc Committee is concerned with interference related issues as far as consumer electronics is concerned. Recent activities include developing voluntary standards for susceptibility of VCRs and cordless telephones. The voluntary standards have been implemented with significant manufacturer compliance. The problems of susceptibility of cordless phones has virtually been phased out and the problem with VCRs has been significantly reduced. C95.1 is concerned with non-iodizing radiation hazards from DC to 100 GHz. The committees main function is to prepare standards on related issues. An example of its current activity is the revision of a standard relating to human exposure. More information can be obtained from:

ANSI
1430 Broadway
New York City, NY 10018

Bio Electromagnetics Society

The Bio Electromagnetic Society (BEMS) is a society devoted to promote scientific effects of electromagnetic radiation within biological systems. The members are scientists and related people who are involved in parallel industries and participants in organizations that recommend and set standards. The society publishes a journal, hold annual meetings, symposiums and workshops. This non-profit organization also recommends people to organizations such as the ANSI subcommittees. Further information cam be obtained from:

Dr. William Wisecup
121 W. Church Street
Frederick, MD 21701

APPLICATION NOTES AND DESIGN GUIDES

Name: **HEWLETT-PACKARD APPLICATION NOTES**
Source: Hewlett-Packard Corp.
Abstract: Hewlett-Packard provides technical application notes in a broad range of technical areas which supply theoretical and tutorial introductions for use within Hewlett-Packard equipment. In addition, reprints of articles from the Hewlett-Packard journal, some product notes and Hewlett-Packard "Bench Briefs" may also be helpful. Consult local Hewlett-Packard technical representative for detailed information in your area of interest.

Name: **ITEM MAGAZINE**
Source: R & B Enterprises Div. of Robar Industries, Inc.
Abstract:

INDEX